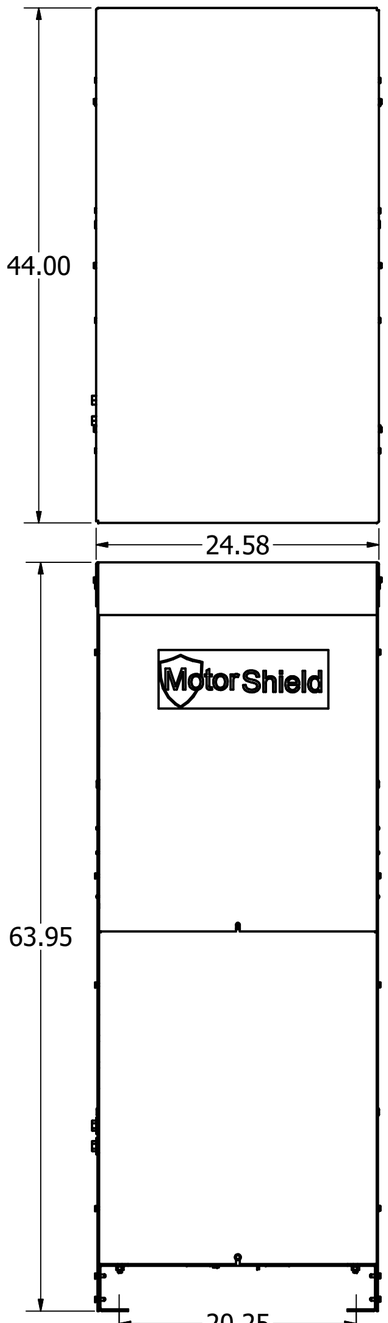

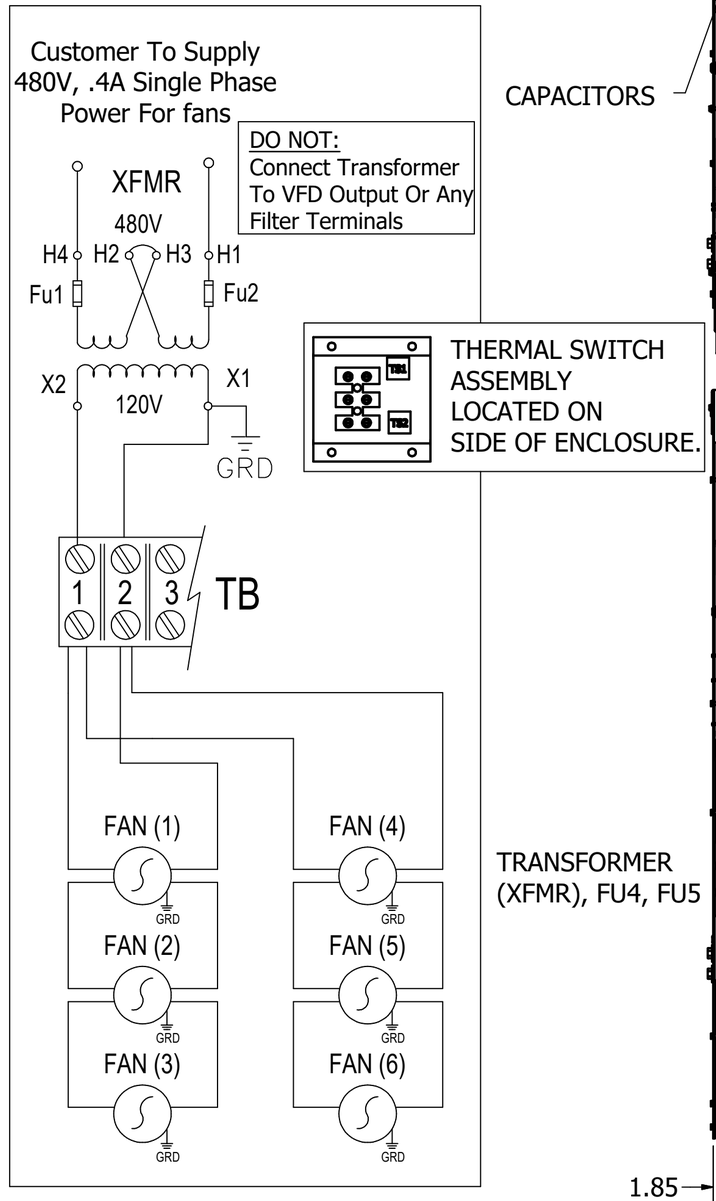

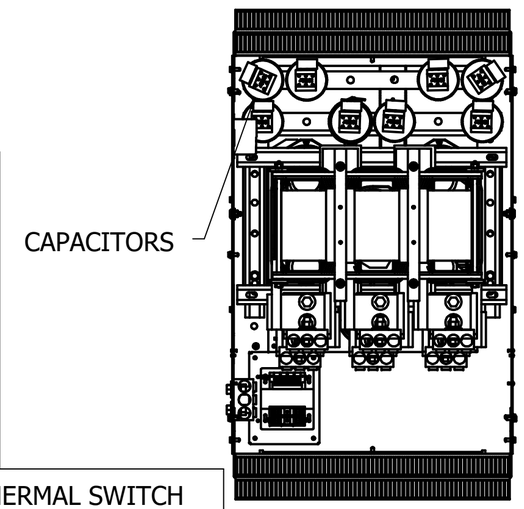

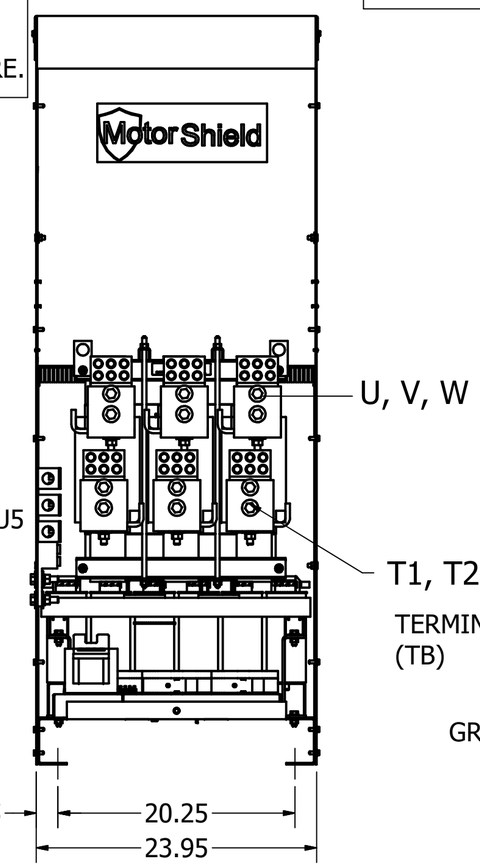

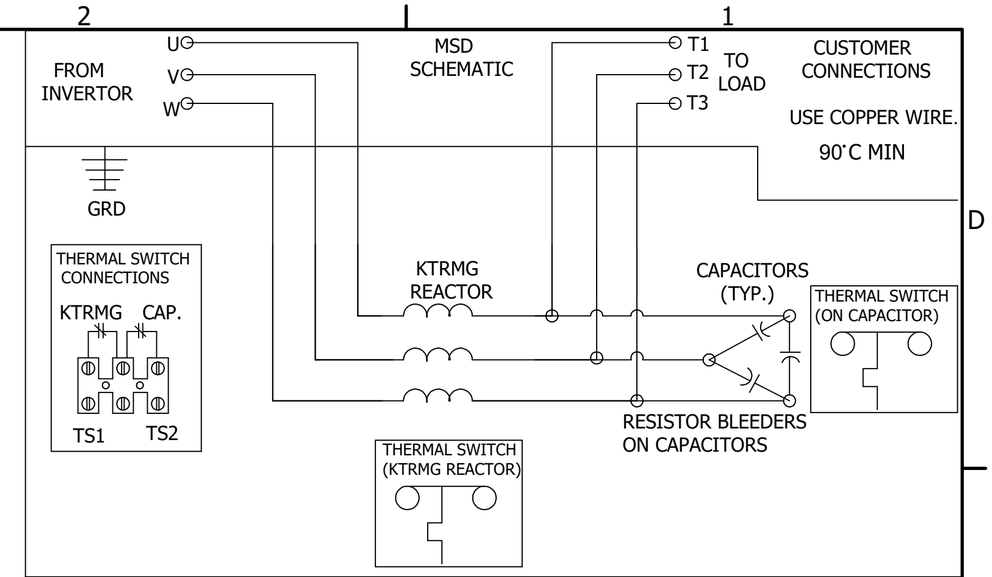

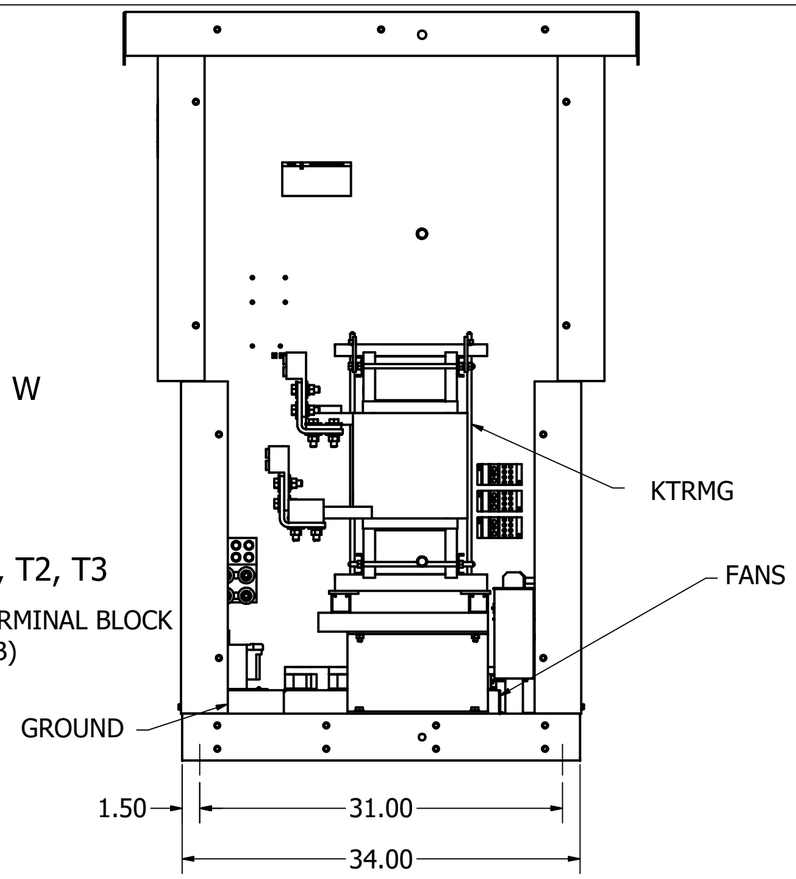

MSD PART NUMBER	HP	VOLTAGE	CURRENT	APPROX. WEIGHT	PRESSURE TERMINAL WIRE RANGE
MSN0960A300	800	480V	960 AMPS	875	(3) 600MCM-2AWG

CUSTOMER IS RESPONSIBLE FOR INSTALLATION
TO MEET ALL NATIONAL AND LOCAL ELECTRICAL CODES.

NOTE: FOR TERMINAL TORQUE
SEE IOM MANUAL.

THE INFORMATION AND DESIGNS CONTAINED IN THIS DRAWING ARE CONFIDENTIAL AND THE PROPRIETARY PROPERTY OF ALLIED MOTION TECHNOLOGIES INC. AND ITS SUBSIDIARIES. NEITHER THIS DESIGN NOR ANY INFORMATION CONTAINED IN THIS DRAWING MAY BE REPRODUCED OR DISCLOSED TO OTHERS WITHOUT THE EXPRESS WRITTEN CONSENT OF ALLIED MOTION TECHNOLOGIES INC. AND ITS SUBSIDIARIES.

NO	REVISION	DATE	BY
D	5579 Fan Tray Added	04/28/21	JRN
C	Drawing Update 4060	07/14/17	JSM

TOLERANCES (EXCEPT AS NOTED)
DECIMAL .XX ± .03 .XXX ± .010
FRACTIONAL ± 1/32
ANGULAR ± 1°

TCI An Allied Motion Company
W132N10611 Grant Drive
Germantown, WI 53022
© 2021 TCI, LLC

MotorShield Sinewave Filter
MSN0960A300, 480/3/60, Type 1/3R

DRN. BY: MJS | DATE: 07/22/15 | 106087DG
SCALE: 1/10 | APRVD: | SIZE C | SHT.1 OF 1