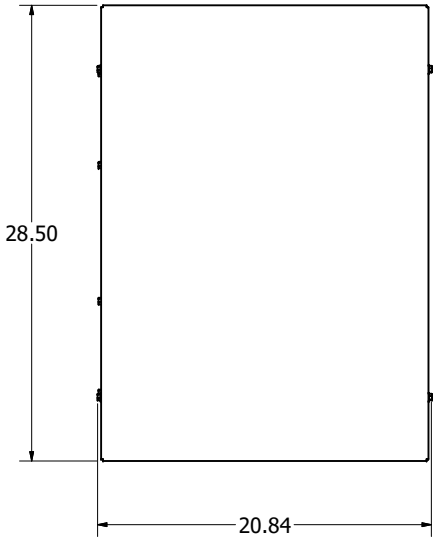

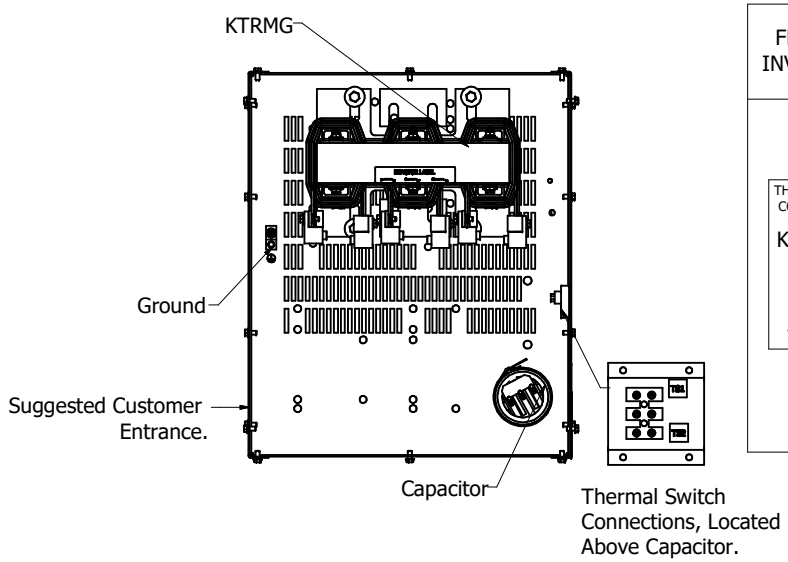

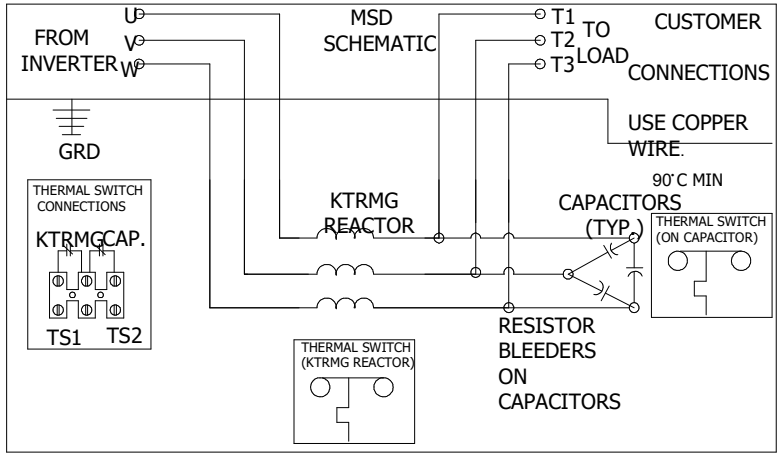

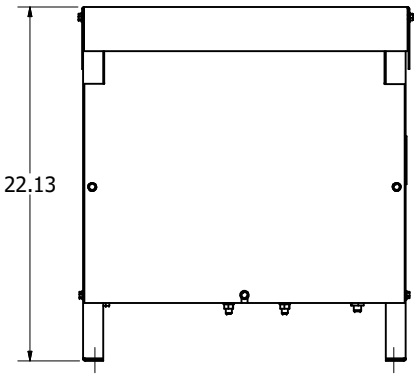

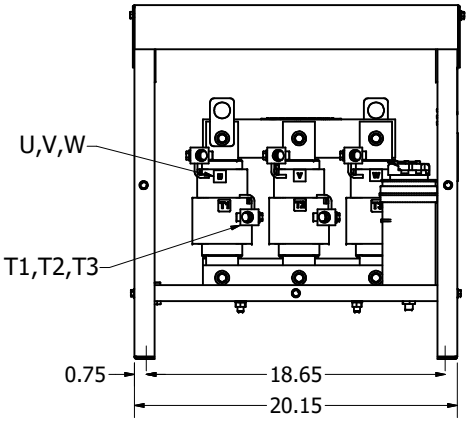

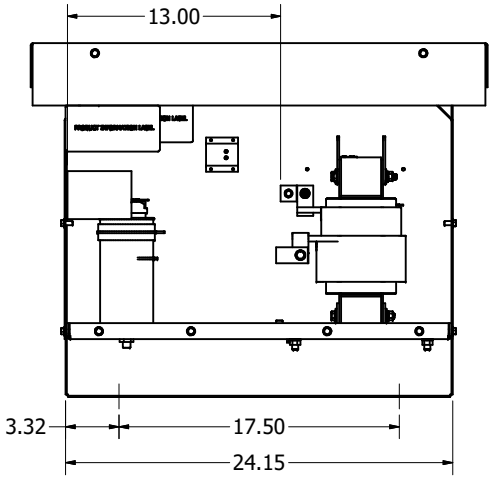

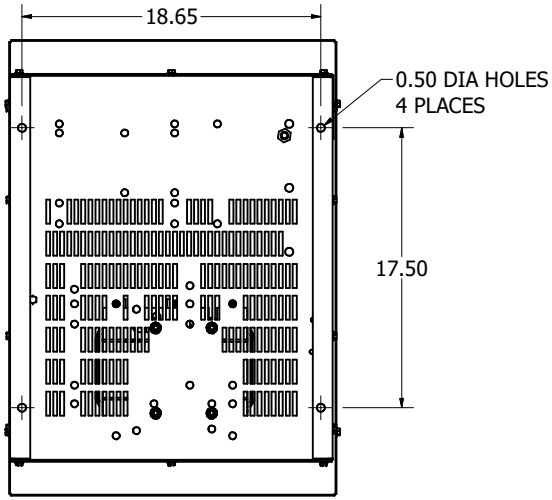

MSD PART NUMBER	HP	VOLTAGE	CURRENT	WEIGHT	PRESSURE TERMINAL WIRE RANGE
MSD0065A300	50	480V	65 AMPS	144LBS	2/0 -14 AWG
MSD0080A300	60	480V	80 AMPS	162LBS	2/0- 14 AWG
MSD0110A300	75	480V	110 AMPS	177LBS	2/0- 14 AWG
MSD0130A300	100	480V	130 AMPS	187LBS	250MCM-1 AWG

Customer Is Resposible For Installation
To Meet All National And Local Electrical Codes.

Material(s) Shall be RoHS Compliant

THE INFORMATION AND DESIGNS CONTAINED IN THIS DRAWING ARE CONFIDENTIAL AND THE PROPRIETARY PROPERTY OF ALLIED MOTION TECHNOLOGIES INC. AND ITS SUBSIDIARIES. NEITHER THIS DESIGN NOR ANY INFORMATION CONTAINED IN THIS DRAWING MAY BE REPRODUCED OR DISCLOSED TO OTHERS WITHOUT THE EXPRESS WRITTEN CONSENT OF ALLIED MOTION TECHNOLOGIES INC. AND ITS SUBSIDIARIES.

NO	REVISION	DATE	BY
E	6320, Inductor update for 80 to130 Amps	6/26/2023	DSW

TOLERANCES (EXCEPT AS NOTED)
DECIMAL
.XX ± .25
.XXX ± .10
FRACTIONAL
± 1/32
ANGULAR
± 1°

TCI An Allied Motion Company
W132N10611 Grant Street
Germantown, WI 53022
© 2023 TCI, LLC

MSD 65 to 130 Amps
MotorShield, 480V, Type 1/3R

DRN. BY: DSW | DATE: 4/27/2015 | 105797DG
SCALE: 1/6 | APRVD: | SIZE: C | SHT 1 OF 1