DELTA ELECTRONICS, INC.

VFD-S

User Manual

Compact Low-Cost Easy-to-Use General-Purpose AC Motor Drives

Power Range:

1-phase 115V series:0.2kW~0.75kW (0.25~1.0HP)
3-phase 230V series:0.2kW~2.2kW (0.25~3.0HP)
3-phase 460V series:0.4kW~2.2kW (0.5~3.0HP)

DELTA ELECTRONICS, INC.

www.delta.com.tw/industrialautomation

ASIA

Delta Electronics, Inc.
Taoyuan1
31-1, Xingbang Road, Guishan Industrial Zone,
Taoyuan County 33370, Taiwan, R.O.C.
TEL: 886-3-362-6301 / FAX: 886-3-362-7267

Delta Electronics (Jiang Su) Ltd.
Wujiang Plant3
1688 Jiangxing East Road,
Wujiang Economy Development Zone,
Wujiang City, Jiang Su Province,
People's Republic of China (Post code: 215200)
TEL: 86-512-6340-3008 / FAX: 86-512-6340-7290

Delta Electronics (Japan), Inc.
Tokyo Office
Delta Shibadaimon Building, 2-1-14 Shibadaimon,
Minato-Ku, Tokyo, 105-0012, Japan
TEL: 81-3-5733-1111 / FAX: 81-3-5733-1211

Delta Electronics (Korea), Inc.
234-9, Duck Soo BD 7F, Nonhyun-dong,
Kangnam-ku, Seoul, Korea
Post code : 135-010
TEL: 82-2-515-5303/5 / FAX: 82-2-515-5302

Delta Electronics (Singapore) Pte. Ltd.
8 Kaki Bukit Road 2, #04-18 Ruby Warehouse Complex,
Singapore 417841
TEL: 65-6747-5155 / FAX: 65-6744-9228

Delta Energy Systems (India) Pvt. Ltd.
Plot No. 27 & 31, Sector-34, EHTP,
Gurgaon-122001 Haryana, India
TEL: 91-124-4169040 / FAX: 91-124-4036045

AMERICA

Delta Products Corporation (USA)
Raleigh Office
P.O. Box 12173,5101 Davis Drive,
Research Triangle Park, NC 27709, U.S.A.
TEL: 1-919-767-3813 / FAX: 1-919-767-3969

EUROPE

Deltronics (Netherlands) B.V.
Eindhoven Office
De Witbogt 15, 5652 AG Eindhoven, The Netherlands
TEL: 31-40-259-28-50/ FAX: 31-40-259-28-51

5011203309
200808-29
SE09

*We reserve the right to change the information in this manual without prior notice

Preface

Thank you for choosing DELTA's high-performance VFD-S Series. The VFD-S Series is manufactured with high-quality components and materials and incorporate the latest microprocessor technology available.

This manual is to be used for the installation, parameter setting, troubleshooting, and daily maintenance of the AC motor drive. To guarantee safe operation of the equipment, read the following safety guidelines before connecting power to the AC motor drive. Keep this operating manual at hand and distribute to all users for reference.

To ensure the safety of operators and equipment, only qualified personnel familiar with AC motor drive are to do installation, start-up and maintenance. Always read this manual thoroughly before using VFD-S series AC Motor Drive, especially the WARNING, DANGER and CAUTION notes. Failure to comply may result in personal injury and equipment damage. If you have any questions, please contact your dealer.

PLEASE READ PRIOR TO INSTALLATION FOR SAFETY.

DANGER!

1. AC input power must be disconnected before any wiring to the AC motor drive is made.
2. A charge may still remain in the DC-link capacitors with hazardous voltages, even if the power has been turned off. To prevent personal injury, please ensure that power has been turned off before opening the AC motor drive and wait ten minutes for the capacitors to discharge to safe voltage levels.
3. Never reassemble internal components or wiring.
4. The AC motor drive may be destroyed beyond repair if incorrect cables are connected to the input/output terminals. Never connect the AC motor drive output terminals U/T1, V/T2, and W/T3 directly to the AC mains circuit power supply.
5. Ground the VFD-S using the ground terminal. The grounding method must comply with the laws of the country where the AC motor drive is to be installed. Refer to the Basic Wiring Diagram.
6. VFD-S series is used only to control variable speed of 3-phase induction motors, NOT for 1-phase motors or other purpose.
7. VFD-S series shall NOT be used for life support equipment or any life safety situation.

WARNING!

1. DO NOT use Hi-pot test for internal components. The semi-conductor used in the AC motor drive is easily damaged by high-pressure.
2. There are highly sensitive MOS components on the printed circuit boards. These components are especially sensitive to static electricity. To prevent damage to these components, do not touch these components or the circuit boards with metal objects or your bare hands.
3. Only qualified personnel are allowed to install, wire and maintain AC motor drive.

CAUTION!

1. Some parameter settings will cause the motor to run immediately after applying power.
2. DO NOT install the AC motor drive in a place subjected to high temperature, direct sunlight, high humidity, excessive vibration, corrosive gases or liquids, or airborne dust or metallic particles.
3. Only use AC motor drives within specification. Failure to comply may result in fire, explosion or electric shock.
4. To prevent personal injury, please keep children and unqualified people away from the equipment.
5. When the motor cable between the AC motor drive and motor is too long, the layer insulation of the motor may be damaged. Please use a frequency inverter duty motor or add an AC output reactor to prevent damage to the motor. Refer to appendix B Reactor for details.
6. The rated voltage for the AC motor drive must be ≤ 240V for 230V models (≤ 120V for 115V models, ≤ 480V for 460V models) and the mains supply current capacity must be ≤ 5000A RMS (≤10000A RMS for the ≥ 40hp (30kW) models).

Table of Contents

Preface i

Table of Contents iii

Chapter 1 Introduction 1-1

1.1 Receiving and Inspection 1-1

1.1.1 Nameplate Information 1-1

1.1.2 Model Explanation 1-1

1.1.3 Series Number Explanation 1-2

1.1.4 Drive Frames 1-2

1.2 Appearances 1-2

1.3 Installation Steps 1-3

1.4 Storage 1-4

Chapter 2 Installation and Wiring 2-1

2.1 Ambient Conditions 2-1

2.2 Installation 2-1

2.3 Dimensions 2-3

2.4 Wiring 2-16

2.4.1 Basic Wiring 2-17

2.4.2 External Wiring 2-22

2.4.3 Main Terminals Connections 2-23

2.4.4 Control Terminals 2-25

2.4.5 Main Circuit Terminals 2-28

Chapter 3 Start Up 3-1

3.1 Preparations before Start-up 3-1
3.2 Operation Method 3-2
3.3 Trial Run 3-2
Chapter 4 Digital Keypad Operation 4-1
4.1 Description of the Digital Keypad 4-1
4.2 Explanation of LED Indicators 4-1
4.3 Explanations of Display Messages 4-1
4.4 How to Operate the Digital Keypad 4-3
Chapter 5 Parameters 5-1
5.1 Summary of Parameter Settings 5-2
Group 0 User Parameters 5-2
Group 1 Basic Parameters 5-2
Group 2 Operation Method Parameters 5-3
Group 3 Output Function Parameters 5-5
Group 4 Input Function Parameters 5-5
Group 5 Multi-Step Speed and PLC Parameters 5-7
Group 6 Protection Parameters 5-7
Group 7 Motor Parameters 5-9
Group 8 Special Parameters 5-9
Group 9 Communication Parameters 5-10
Group A PID Parameters 5-10
5.2 Parameter Settings for Applications 5-12
5.3 Description of Parameter Settings 5-17
Group 0: User Parameters. 5-17
Group 1: Basic Parameters 5-22
Group 2: Operation Method Parameters 5-27

Group 3: Output Function Parameters 5-31
Group 4: Input Function Parameters 5-35
Group 5: Multi-step Speeds and PLC Parameters 5-47
Group 6: Protection Parameters 5-52
Group 7: Motor Parameters 5-57
Group 8: Special Parameters 5-58
Group 9: Communication Parameters 5-62
Group A: PID Control 5-75
Chapter 6 Fault Code Information 6-1
6.1 Common Problems and Solutions 6-1
6.2 Reset 6-4
Chapter 7 Troubleshooting 7-1
7.1 Over Current (OC) 7-1
7.2 Ground Fault 7-2
7.3 Over Voltage (OV) 7-2
7.4 Low Voltage (Lv) 7-3
7.5 Over Heat (OH) 7-4
7.6 Overload 7-4
7.7 Keypad Display is Abnormal 7-5
7.8 Phase Loss (PHL) 7-5
7.9 Motor cannot Run 7-6
7.10 Motor Speed cannot be Changed 7-7
7.11 Motor Stalls during Acceleration 7-8
7.12 The Motor does not Run as Expected 7-8
7.13 Electromagnetic/Induction Noise 7-9
7.14 Environmental Condition 7-9

7.15 Affecting Other Machines 7-10

Chapter 8 Maintenance and Inspections 8-1

Appendix A Specifications A-1

Appendix B Accessories B-1

B.1 All Brake Resistors & Brake Units Used in AC Motor Drives B-1

B.1.1 Dimensions and Weights for Brake resistors B-3

B.2 EMI Filters B-4

B.2.1 Dimensions B-7

B.3 AC Reactor B-11

B.3.1 AC Input Reactor Recommended Value B-11

B.3.2 AC Output Reactor Recommended Value B-11

B.3.3 Applications for AC Reactor B-12

B.4 DC Choke Recommended Values B-14

B.5 Zero Phase Reactor (RF220X00A) B-15

B.6 Din Rail-DR01 ..... B-16

B.7 Remote Controller RC-01 ..... B-17

B.8 Conduit Bracket (BK-S) B-18

B.9 Non-fuse Circuit Breaker Chart B-19

Appendix C How to Select the Right AC Motor Drive C-1

C.1 Capacity Formulas C-2

C.2 General Precautions C-4

C.3 How to Choose a Suitable Motor C-5

Chapter 1 Introduction

1.1 Receiving and Inspection

This VFD-S AC motor drive has gone through rigorous quality control tests at the factory before shipment. After receiving the AC motor drive, please check for the following:

- Check to make sure that the package includes an AC motor drive, the User Manual/Quick Start and CD, dust covers and rubber bushings.
- Inspect the unit to assure it was not damaged during shipment.
- Make sure that the part number indicated on the nameplate corresponds with the part number of your order.

1.1.1 Nameplate Information

Example for 1HP/0.75kW 3-phase 230V AC motor drive

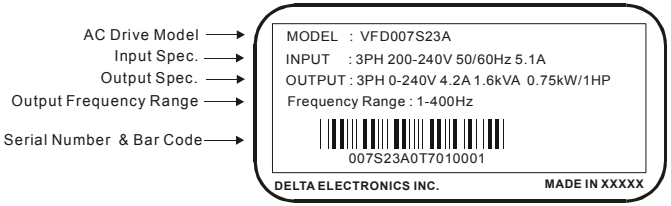

1.1.2 Model Explanation

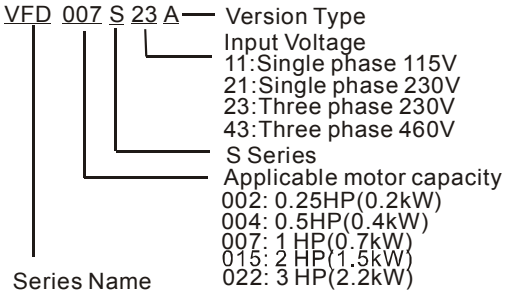

1.1.3 Series Number Explanation

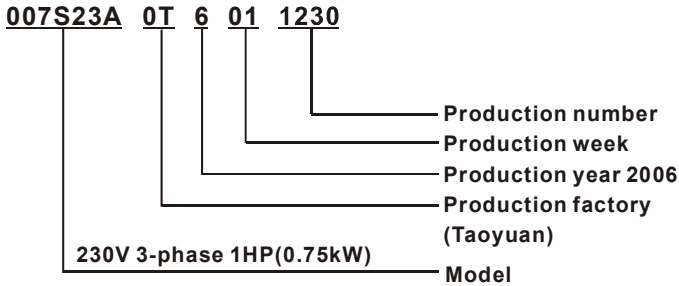

If the nameplate information does not correspond to your purchase order or if there are any problems, please contact your distributor.

1.1.4 Drive Frames

Frame	Power range	Models
S1	0.25-2hp (0.2-1.5kW)	VFD002S11A/11B/21A/21B/21E/23A, VFD004S11A/11B/21A/21B/21E/23A/43A/43B/43E, VFD007S21A/21B/21E/23A/43A/43B/43E, VFD015S23D
S2	1-5hp (0.75-3.7kW)	VFD007S11A/11B, VFD015S21D/21E/21U/43D/43E/43U, VFD022S21D/21E/21U/23D/43D/43E/43U

Please refer to Chapter 2.3 for exact dimensions.

1.2 Appearances

VFD002S11A/11B/21A/21B/23A, VFD004S11A/11B/21A/21B/23A/43A/43B/43E, VFD007S21A/21B/23A/43A/43B/43E,	Frame S1: VFD002S21E, VFD004S21E, VFD007S21E, VFD015S23D, Frame S2: VFD007S11A/11B, VFD015S21D/21E/21U/43D/43E/43U, VFD022S21D/21E/21U/23D/43D/43E/43U

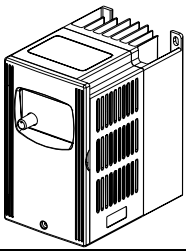

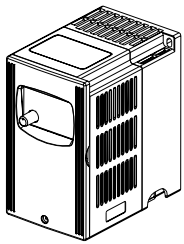

1.3 Installation Steps

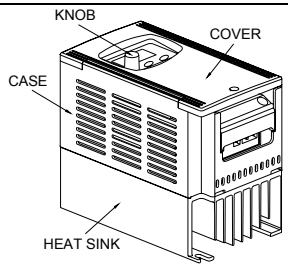

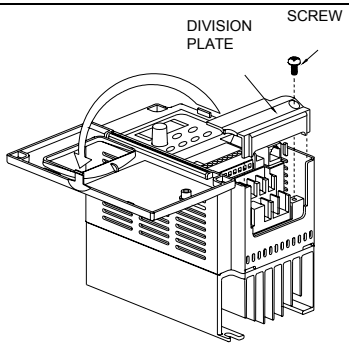

Installation Steps

1. Remove front cover screw and open.
2. Remove Division Plate. If using optional conduit bracket, please refer to next page.
3. Connect AC Input Power and motor leads. Never connect the AC drive output terminals U/T1, V/T2, W/T3 to main AC Input power.
4. Reinstall Division Plate.

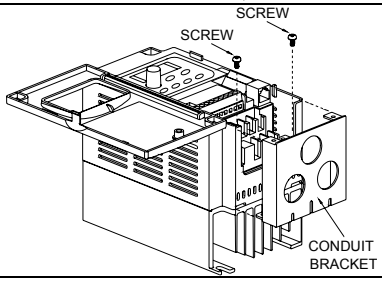

For Optional Conduit Bracket:
Make sure to fasten both screws on conduit bracket as shown in the drawing for safety grounding purpose. Bring all the wires out through the conduit bracket.
Screw Torque: 5 to 6 kgf-cm (4.3 to 5.2 in-lbf)

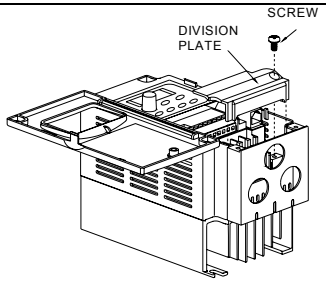

Reinstall Division Plate.
Screw Torque: 5 to 6 kgf-cm (4.3 to 5.2 in-lbf)

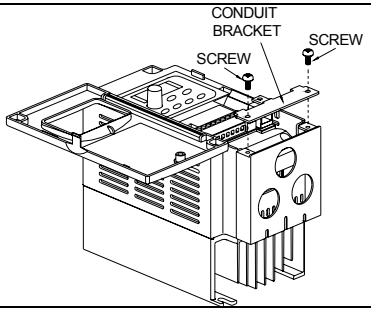

Install Conduit Bracket cover and tighten screws.

1.4 Storage

The AC motor drive should be kept in the shipping carton or crate before installation. In order to retain the warranty coverage, the AC motor drive should be stored properly when it is not to be used for an extended period of time. Storage conditions are:

Store in a clean and dry location free from direct sunlight or corrosive fumes.
Store within an ambient temperature range of -20 °C to +60 °C.
Store within a relative humidity range of 0% to 90% and non-condensing environment.
Store within an air pressure range of 86kPa to 106kPa.

CAUTION!

1. DO NOT store in an area with rapid changes in temperature. It may cause condensation and frost.
2. DO NOT place on the ground directly. It should be stored properly. Moreover, if the surrounding environment is humid, you should put exsiccator in the package.

3. If the AC motor drive is stored for more than 3 months, the temperature should not be higher than 30 °C. Storage longer than one year is not recommended, it could result in the degradation of the electrolytic capacitors.
4. When the AC motor drive is not used for a long time after installation on building sites or places with humidity and dust, it's best to move the AC motor drive to an environment as stated above.

This page intentionally left blank.

Chapter 2 Installation and Wiring

2.1 Ambient Conditions

Install the AC motor drive in an environment with the following conditions:

Operation	Air Temperature:	-10 ~ +40°C (14 ~ 104°F), Non-condensing and not frozen
	Relative Humidity:	<90%, no condensation allowed
	Atmosphere pressure:	86 ~ 106 kPa
	Installation Site Altitude:	<1000m
	Vibration:	<20Hz: 9.80 m/s^2 (1G) max 20 ~ 50Hz: 5.88 m/s^2 (0.6G) max
Storage Transportation	Temperature:	-20°C ~ +60°C (-4°F ~ 140°F)
	Relative Humidity:	<90%, no condensation allowed
	Atmosphere pressure:	86 ~ 106 kPa
	Vibration:	<20Hz: 9.80 m/s^2 (1G) max 20 ~ 50Hz: 5.88 m/s^2 (0.6G) max
Pollution Degree	2: good for a factory type environment.	

CAUTION!

1. Operating, storing or transporting the AC motor drive outside these conditions may cause damage to the AC motor drive.
2. Failure to observe these precautions may void the warranty!

2.2 Installation

1. Mount the AC motor drive vertically on a flat vertical surface by using bolts or screws. Other directions are not allowed.
2. The AC motor drive will generate heat during operation. Allow sufficient space around the unit for heat dissipation.
3. The heat sink temperature may rise to 90°C when running. The material on which the AC motor drive is mounted must be noncombustible and be able to withstand this high temperature.
4. When the AC motor drive is installed in a confined space (e.g. cabinet), the surrounding temperature must be within 10 ~ 40°C with good ventilation. DO NOT install the AC motor drive in a space with bad ventilation.

5. When installing multiple AC motor drives in the same cabinet, they should be adjacent in a row with enough space. When installing one AC motor drive below another one, use a metal separation barrier between the AC motor drives to prevent mutual heating. Refer to figure below for details.
6. Prevent fiber particles, scraps of paper, saw dust, metal particles, etc. from adhering to the heatsink.

Mounting Clearances

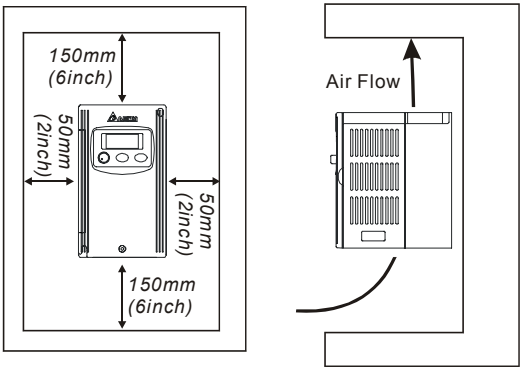

2.3 Dimensions

(Dimensions are in millimeter and [inch])

Frame S1: VFD002S11A, VFD002S21A, VFD002S23A

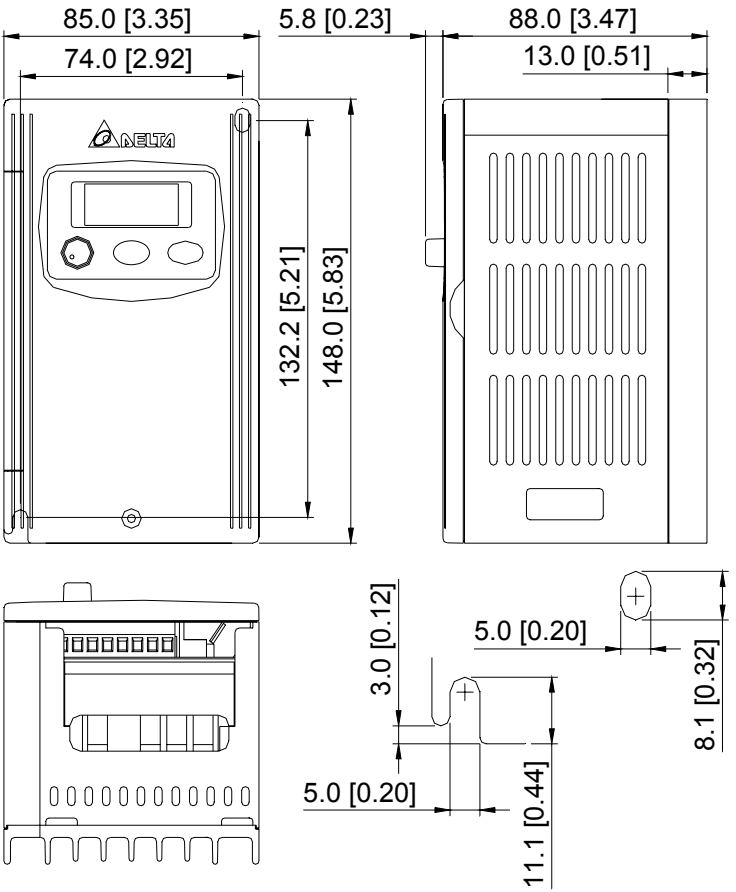

Frame S1: VFD002S11B, VFD002S21B

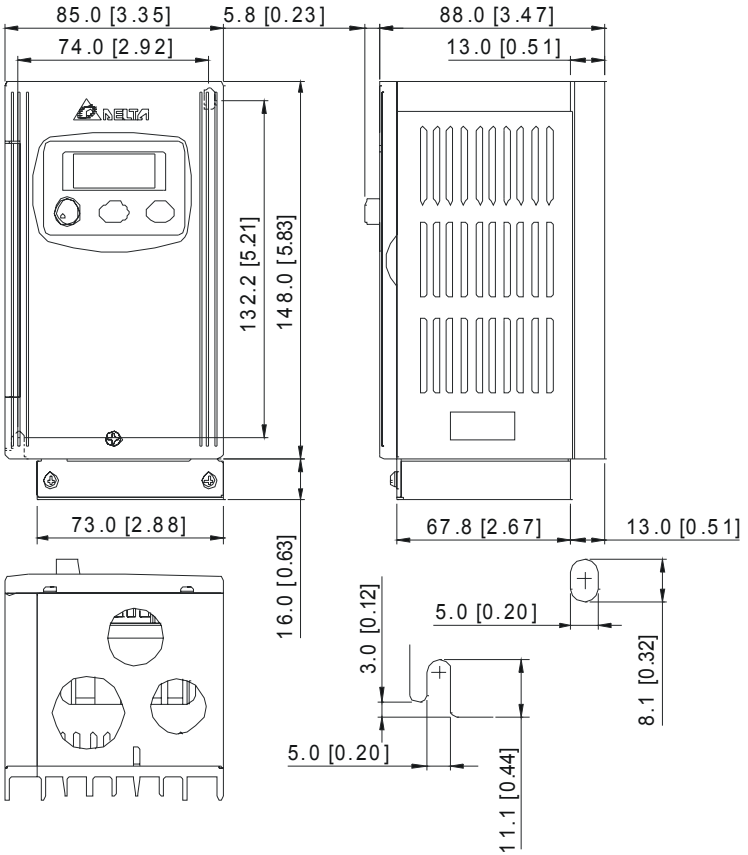

Frame S1: VFD004S11A, VFD004S21A, VFD004S23A

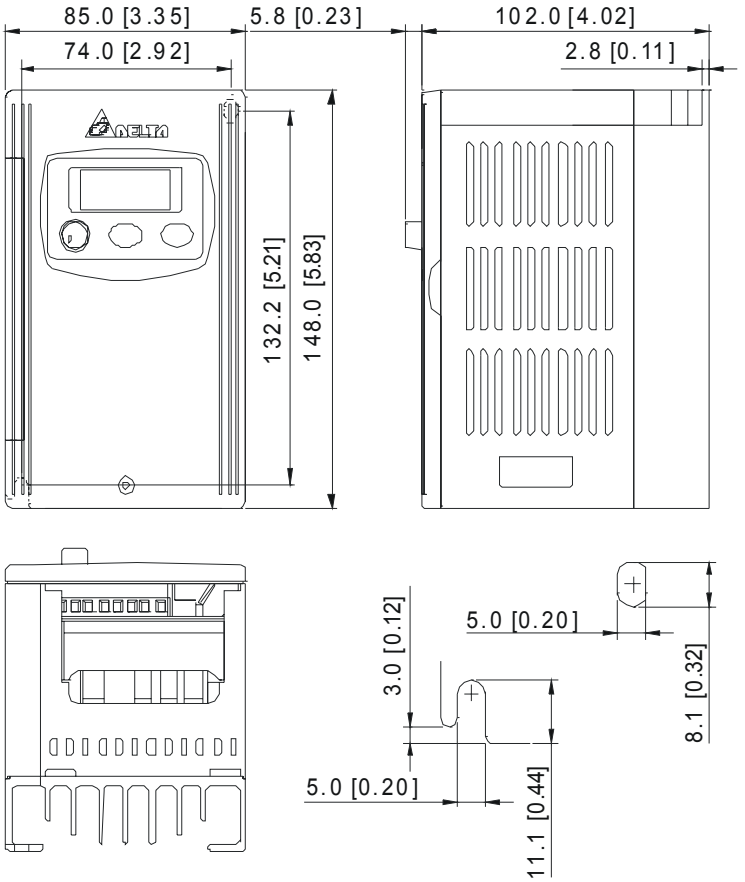

Frame S1: VFD004S11B, VFD004S21B

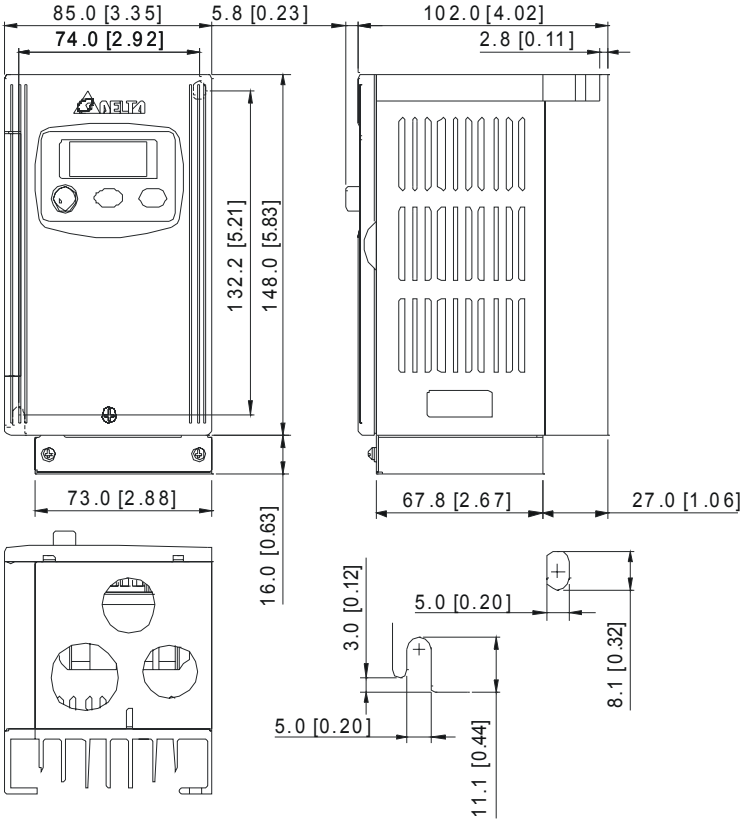

Frame S1: VFD007S21A, VFD007S23A

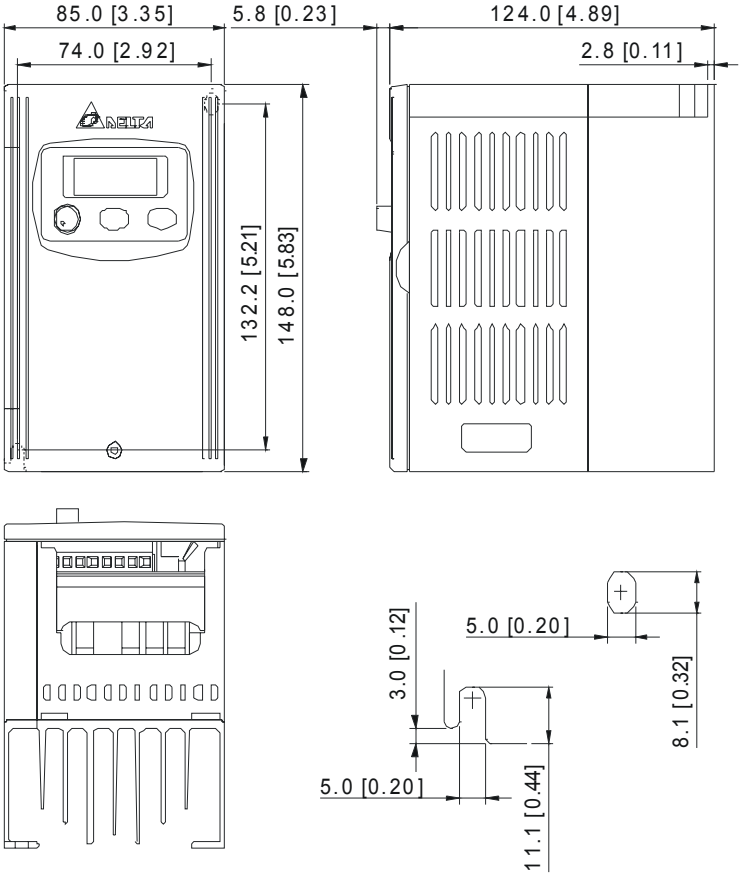

Frame S1: VFD007S21B

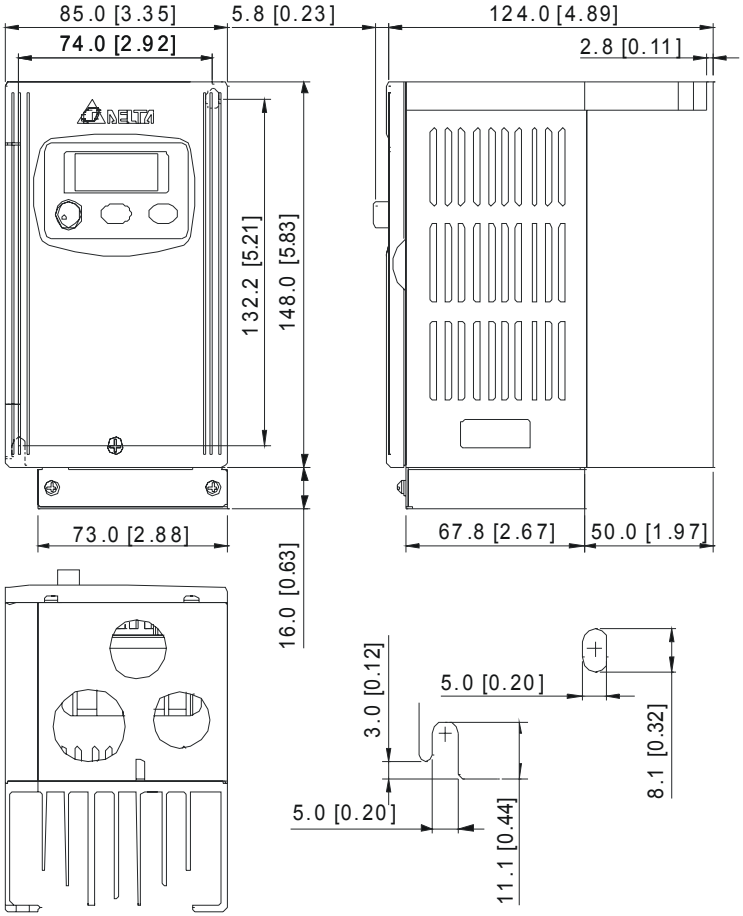

Frame S1: VFD004S43A, VFD004S43E, VFD007S43A, VFD007S43E

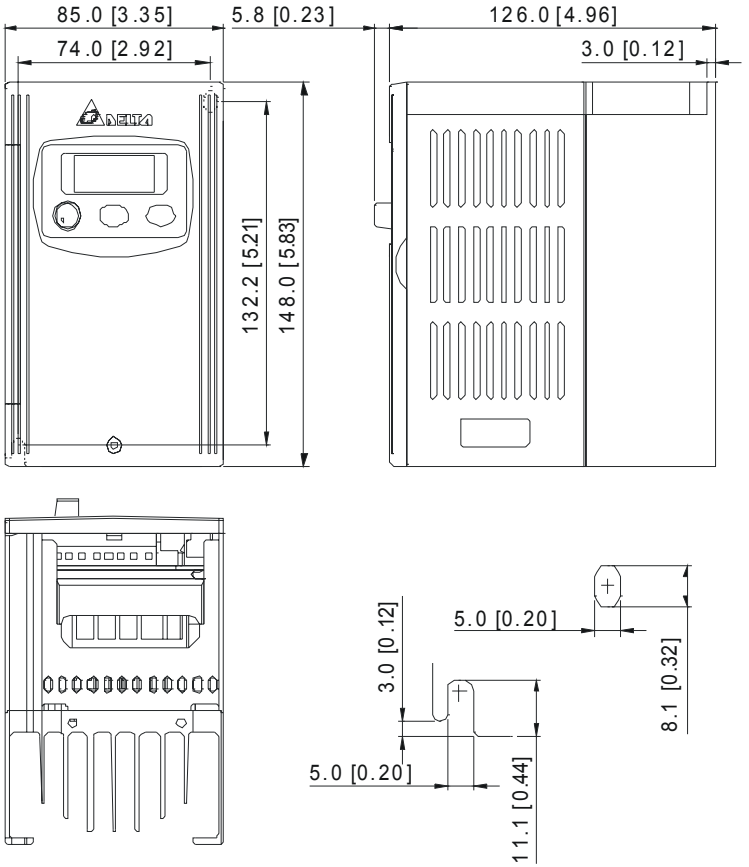

Frame S1: VFD004S43B, VFD007S43B

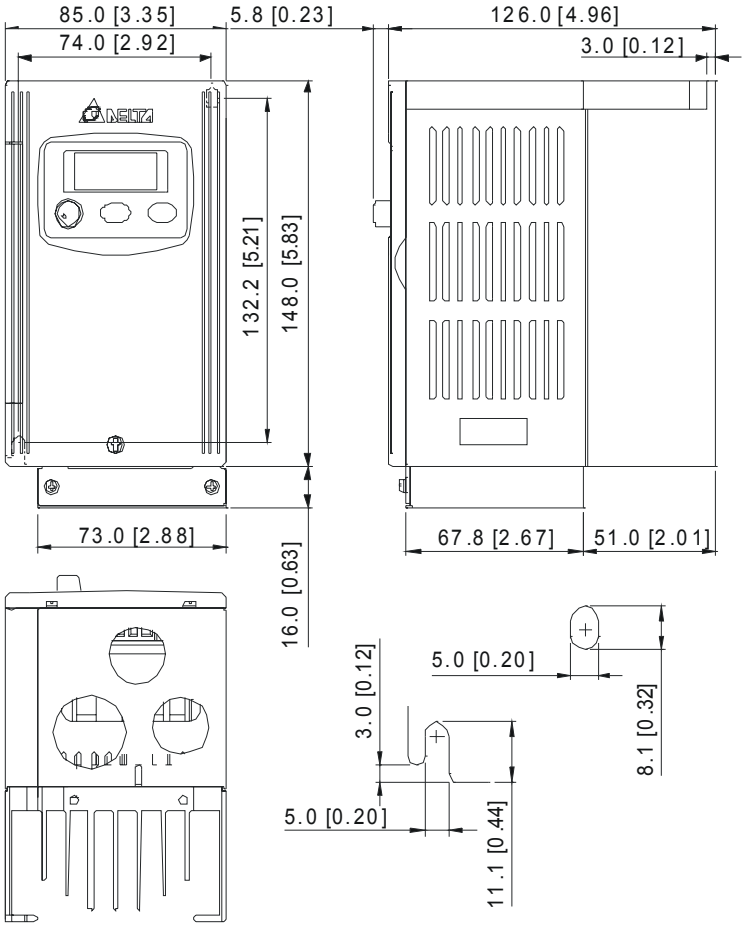

Frame S1: VFD002S21E, VFD004S21E, VFD007S21E, VFD015S23D

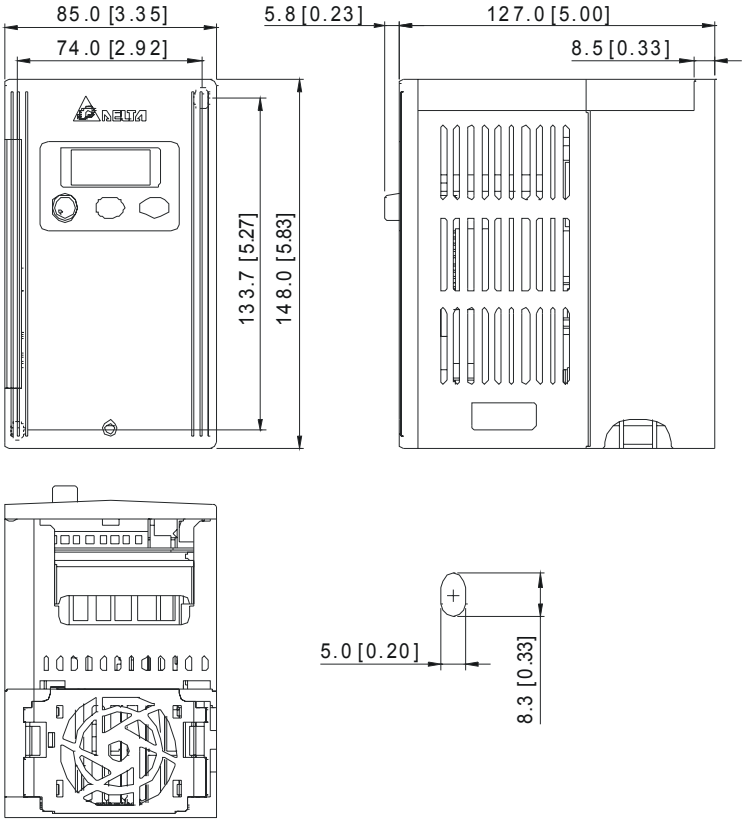

Frame S2: VFD007S11A

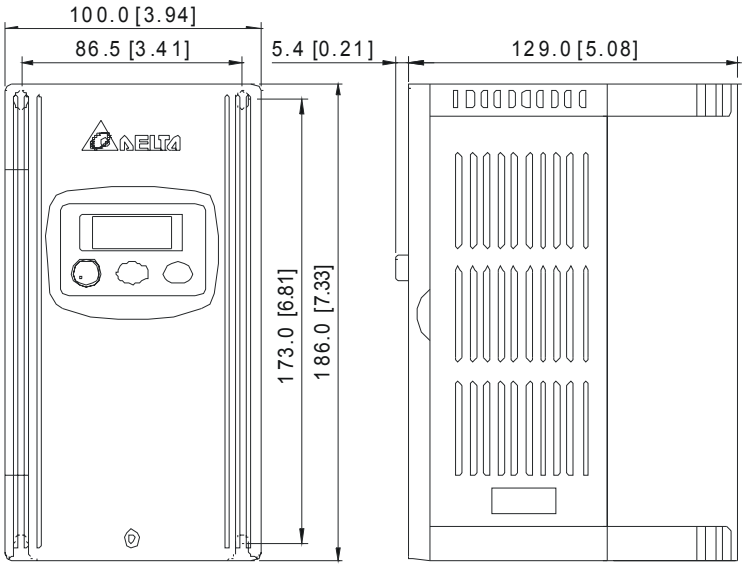

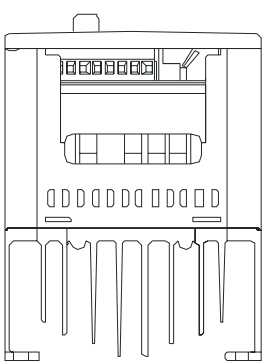

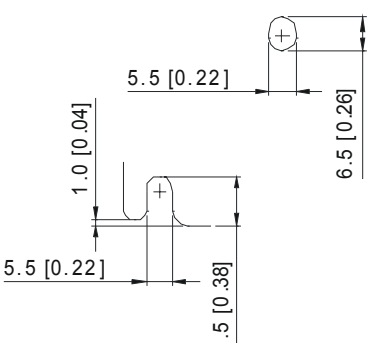

Frame S2: VFD007S11B

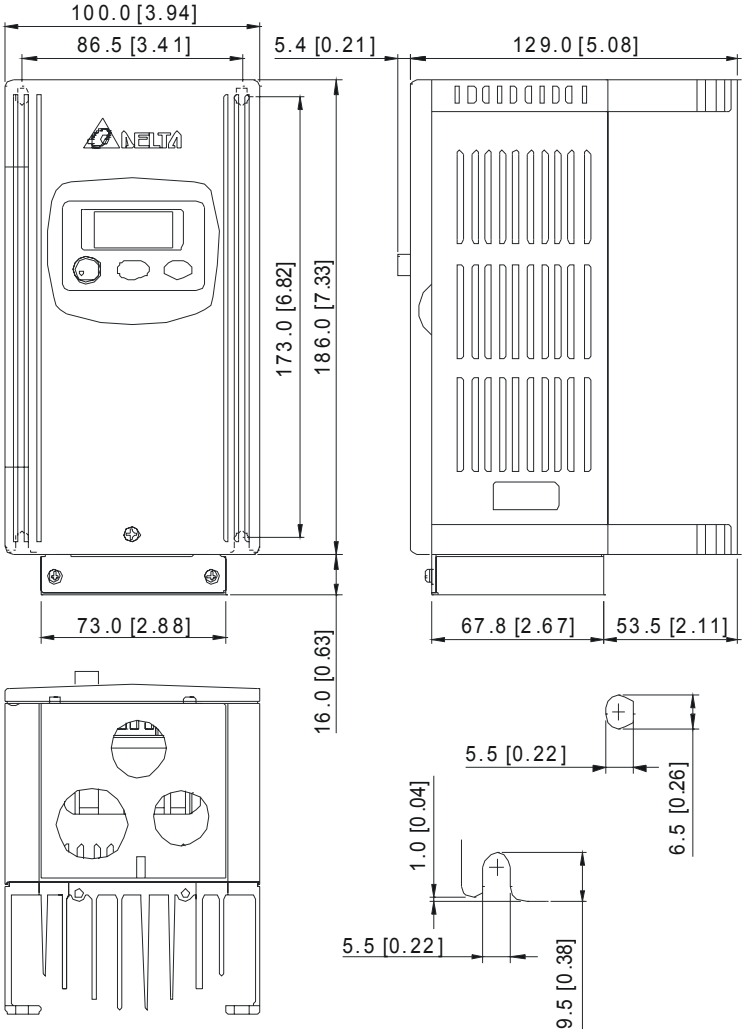

Frame S2: VFD015S21D, VFD015S21E, VFD015S43D, VFD015S43E, VFD022S21D, VFD022S21E, VFD022S23D, VFD022S43D, VFD022S43E

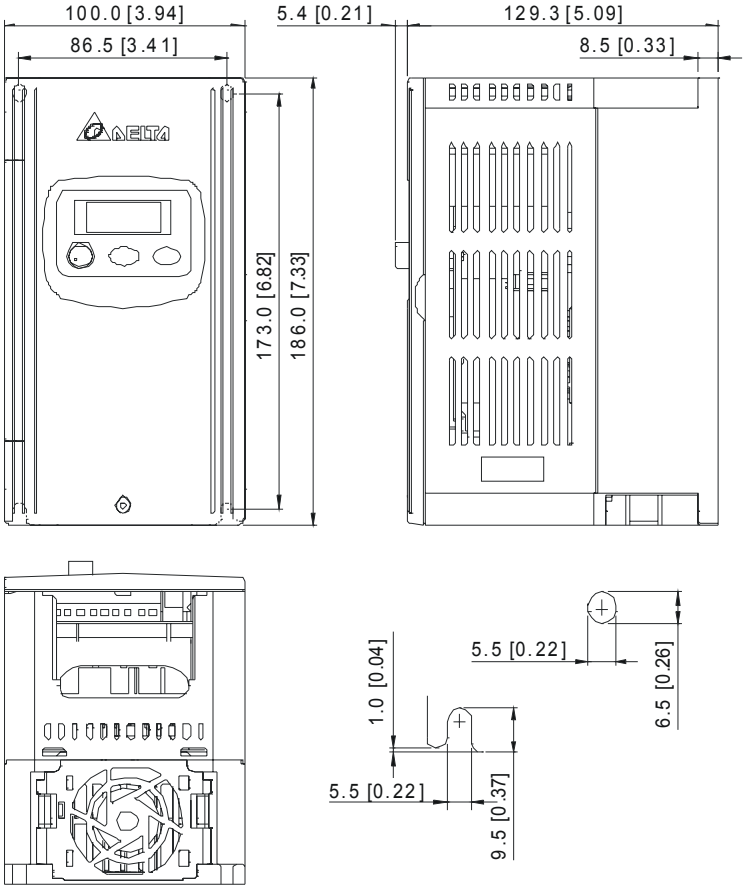

Frame S2: VFD015S21U, VFD015S43U, VFD022S21U, VFD022S43U

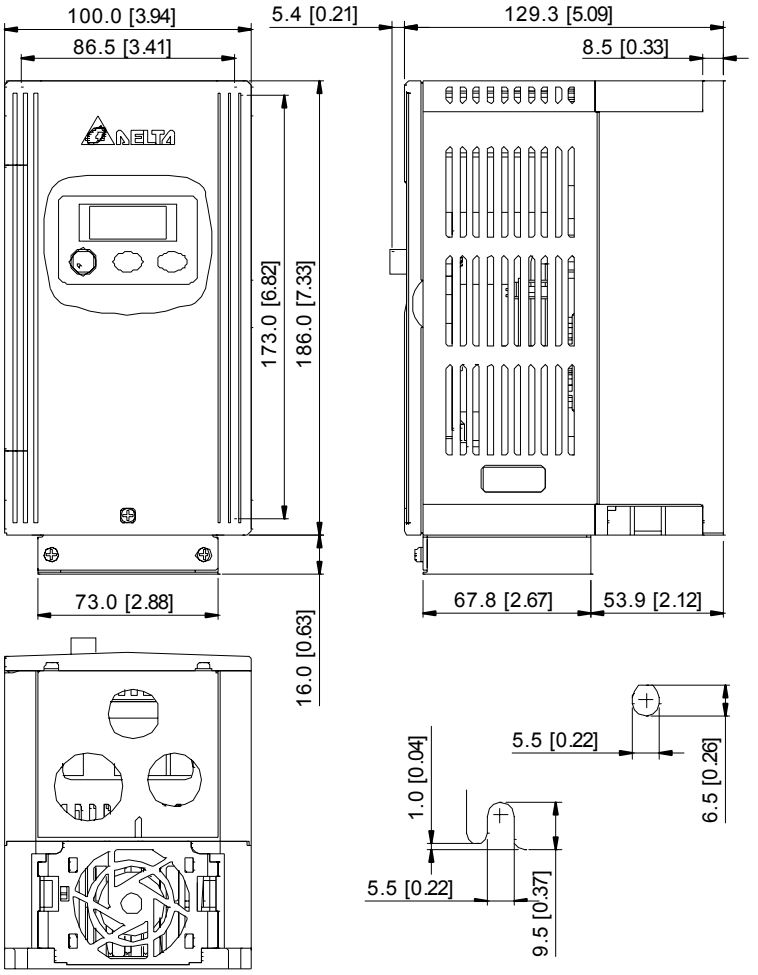

2.4 Wiring

After removing the front cover, check if the power and control terminals are clear of debris. Be sure to observe the following precautions when wiring.

- General Wiring Information

Applicable Codes

All VFD-S series are Underwriters Laboratories, Inc. (UL) and Canadian Underwriters Laboratories (cUL) listed, and therefore comply with the requirements of the National Electrical Code (NEC) and the Canadian Electrical Code (CEC).

Installation intended to meet the UL and cUL requirements must follow the instructions provided in “Wiring Notes” as a minimum standard. Follow all local codes that exceed UL and cUL requirements. Refer to the technical data label affixed to the AC motor drive and the motor nameplate for electrical data.

The "Line Fuse Specification" in Appendix B, lists the recommended fuse part number for each S-Series part number. These fuses (or equivalent) must be used on all installations where compliance with U.L. standards is a required.

2.4.1 Basic Wiring

- Make sure that power is only applied to the R/L1, S/L2, T/L3 terminals. Failure to comply may result in damage to the equipment. The voltage and current should lie within the range as indicated on the nameplate.
- Check the following items after completing the wiring:
  1. Are all connections correct?
  2. No loose wires?
  3. No short-circuits between terminals or to ground?

A charge may still remain in the DC bus capacitors with hazardous voltages even if the power has been turned off. To prevent personal injury, please ensure that the power is turned off and wait ten minutes for the capacitors to discharge to safe voltage levels before opening the AC motor drive.

DANGER!

1. All the units must be grounded directly to a common ground terminal to prevent electric shock, fire and interference.
2. Only qualified personnel familiar with AC motor drives are allowed to perform installation, wiring and commissioning.
3. Make sure that the power is off before doing any wiring to prevent electric shocks.

Basic Wiring Diagrams

Users must connect wires according to the circuit diagrams on the following pages. Do not plug a modem or telephone line to the RS-485 communication port or permanent damage may result. Pins 1 & 2 are the power supply for the optional copy keypad only and should not be used for RS-485 communication.

For VFDXXXSXXA/B/D/U

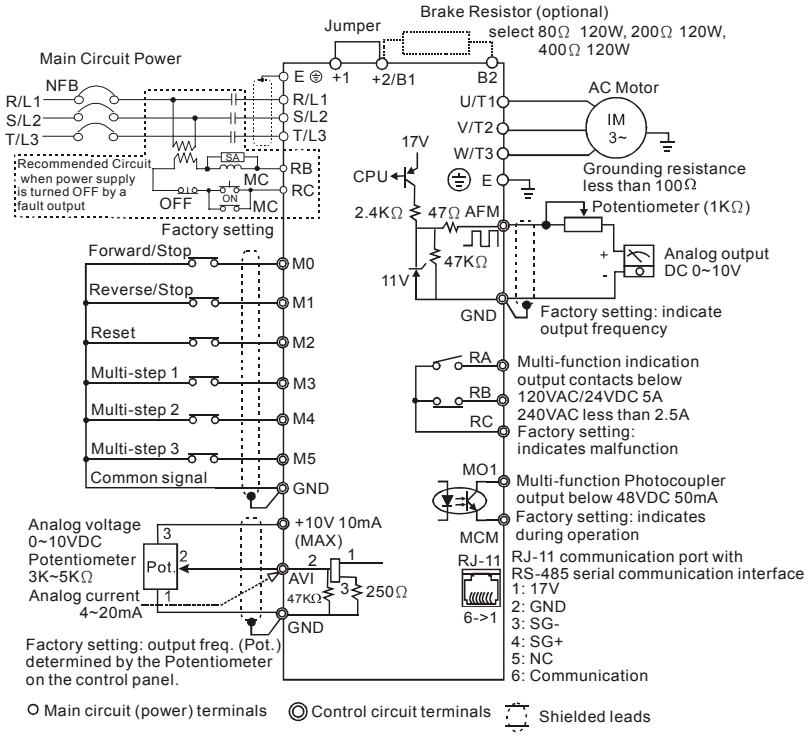

NOTE: Do not plug in a modem or telephone line to the RS-485 communication port, permanent damage may result. Pins 1&2 are the power sources for the optional copy keypad and should not be used while using RS-485 communication.

*If it is single phase model, please select any of the two input power terminals in main circuit power.

For VFDXXXSXXE

NPN (sink mode)

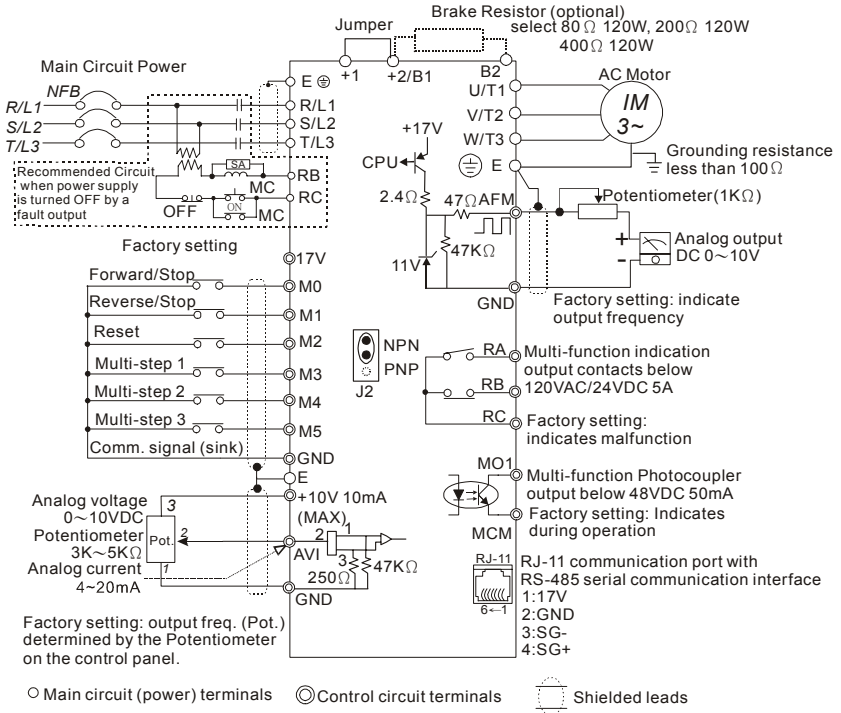

○ Main circuit (power) terminals ◎ Control circuit terminals Shielded leads

NOTE: Do not plug in a Modem or telephone line to the RS-485 communication port, permanent damage may result. Pins 1 & 2 are the power sources for the optional copy keypad and should not be used while using RS-485 communication.

* If it is single phase model, please select any of the two input power terminals in main circuit power.

Two/Three wire control

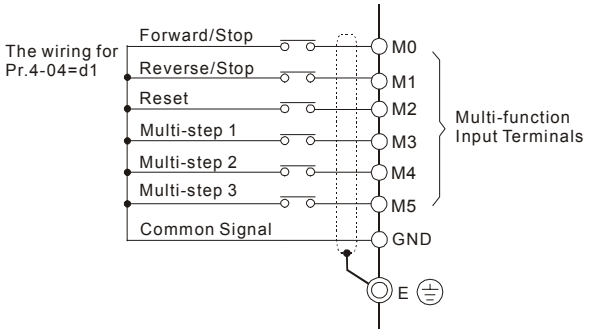

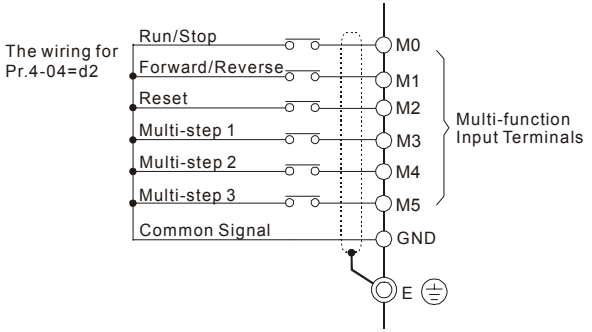

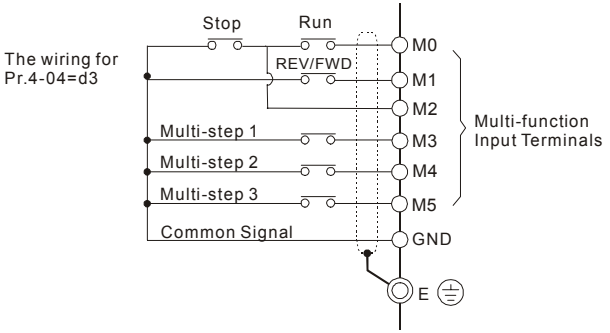

For VFDXXXSXXE

NPN Mode

NPN mode without external power

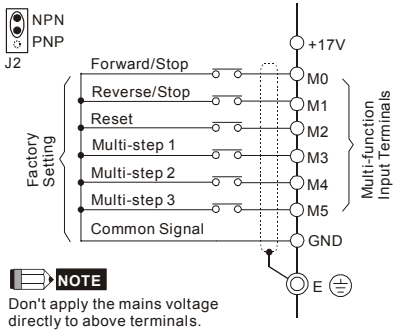

NOTE

Don't apply the mains voltage directly to above terminals.

NPN mode with external power

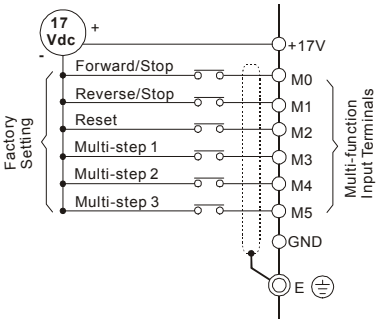

PNP Mode

PNP mode without external power

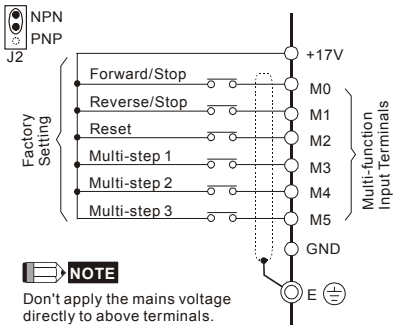

NOTE

Don't apply the mains voltage directly to above terminals.

PNP mode with external power

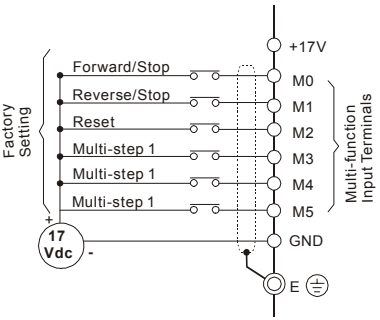

2.4.2 External Wiring

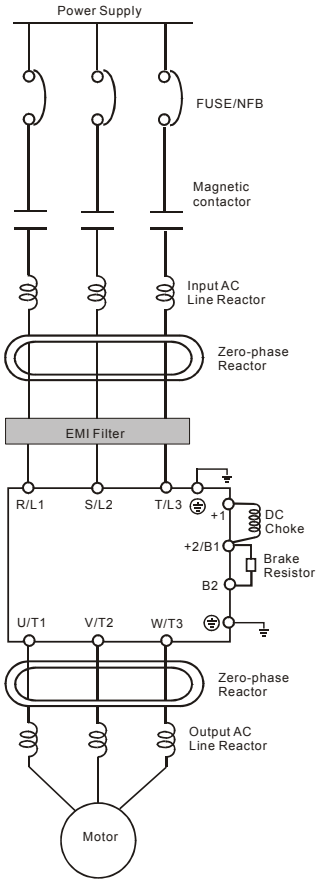

Items	Explanations
Power supply	Please follow the specific power supply requirements shown in Appendix A.
Fuse/NFB (Optional)	There may be an inrush current during power up. Please check the chart of Appendix B and select the correct fuse with rated current. Use of an NFB is optional.
Magnetic contactor (Optional)	Please do not use a Magnetic contactor as the I/O switch of the AC motor drive, as it will reduce the operating life cycle of the AC drive.
Input AC Line Reactor (Optional)	Used to improve the input power factor, to reduce harmonics and provide protection from AC line disturbances (surges, switching spikes, short interruptions, etc.). AC line reactor should be installed when the power supply capacity is 500kVA or more and or advanced capacity is activated. And the mains wiring distance should be $\leq$ 10m. Refer to Appendix B for details.
Zero-phase Reactor (Ferrite Core Common Choke) (Optional)	Zero phase reactors are used to reduce radio noise especially when audio equipment is installed near the inverter. Effective for noise reduction on both the input and output sides. Attenuation quality is good for a wide range from AM band to 10MHz. Appendix B specifies the zero phase reactor. (RF220X00A)
EMI filter (Optional)	To reduce electromagnetic interference, please refer to Appendix B for more details.
Brake resistor (Optional)	Used to reduce the deceleration time of the motor. Please refer to the chart in Appendix B for specific brake resistors.
Output AC Line Reactor (Optional)	Motor surge voltage amplitude depends on motor cable length. For applications with long motor cable (>20m), it is necessary to install a reactor at the inverter output side.

2.4.3 Main Terminals Connections

Terminal Symbol	Explanation of Terminal Function
R/L1, S/L2, T/L3	AC line input terminals (3-phase)
L/L1, N/L2	AC line input terminals (1-phase)
U/T1, V/T2, W/T3	AC drive output terminals for connecting 3-phase induction motor
+1, +2/B1	Connections for DC choke. Please remove the jumper prior to installation.
+2/B1, B2	Connections for brake resistor (optional)
⏚	Earth connection, please comply with local regulations.

Mains power terminals (R/L1, S/L2, T/L3 and L/L1, N/L2)

- Connect these terminals via a non-fuse breaker or earth leakage breaker to 3-phase AC power (some models to 1-phase AC power) for circuit protection. It is unnecessary to consider phase-sequence.
- It is recommended to add a magnetic contactor (MC) in the power input wiring to cut off power quickly and reduce malfunction when activating the protection function of AC motor drives. Both ends of the MC should have an R-C surge absorber.
- Do NOT run/stop AC motor drives by turning the power ON/OFF. Run/stop AC motor drives by RUN/STOP command via control terminals or keypad. If you still need to run/stop AC drives by turning power ON/OFF, it is recommended to do so only ONCE per hour.
- Do NOT connect 3-phase models to a 1-phase power source, or else phase loss may occur.

Control circuit terminals (U/T1, V/T2, W/T3)

- When the AC drive output terminals U/T1, V/T2, and W/T3 are connected to the motor terminals U, V, and W, respectively, the motor will rotate counterclockwise (as viewed on the shaft end of the motor) when a forward operation command is received. To permanently reverse the direction of motor rotation, switch over any of the two motor leads.

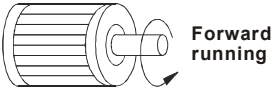

- DO NOT connect phase-compensation capacitors or surge absorbers at the output terminals of AC motor drives.
- With long motor cables, high capacitive switching current peaks can cause over-current, high leakage current or lower current readout accuracy. To prevent this, the motor cable should be less than 20m for 3.7kW models and below. And the cable should be less than 50m for 5.5kW models and above. For longer motor cables use an AC output reactor.
- Use a well-insulated motor, suitable for inverter operation.

Terminals [+2/B1, +1] for connecting DC reactor

- This is the connector for the DC reactor to improve the power factor. Please remove the short jumper when connecting DC reactor.

Terminals [+2/B1, B2] for connecting brake resistor

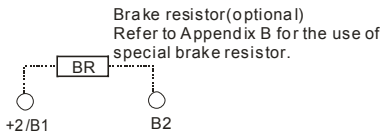

- Connect a brake resistor in applications with frequent deceleration ramps, short deceleration time, too low brake torque or requiring increased brake torque.

WARNING!

Short-circuiting [+2/B1, B2] can damage the AC motor drive.

Grounding terminals (⏚)

- Make sure that the leads are connected correctly and the AC drive is properly grounded. (Ground resistance should not exceed 0.1Ω.)
- Use ground leads that comply with local regulations and keep them as short as possible.
- Multiple VFD-S units can be installed in one location. All the units should be grounded directly to a common ground terminal, as shown in the figure below. **Ensure there are no ground loops.**

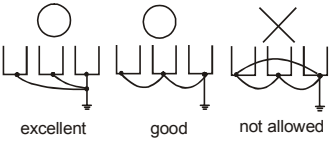

2.4.4 Control Terminals

Control Terminal Wiring (Factory Setting)

A. XXXSXXA/B/D/U

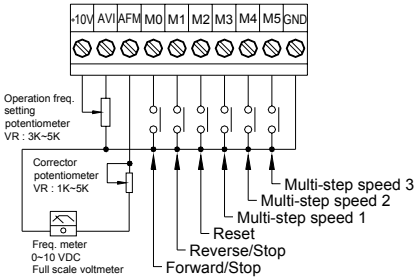

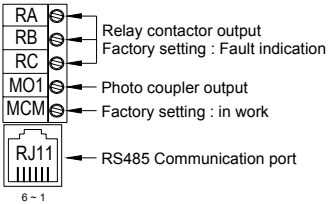

Wire Gauge: 24-12 AWG
Wire Type: Copper Only
Torque: 4 kgf-cm (3.5 in-lbf)

B. XXXSXXE

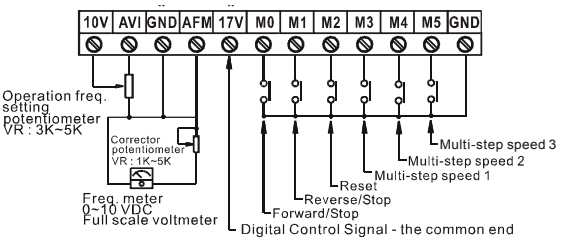

Wire Gauge: 24-16 AWG
Wire Type: Copper Only
Torque: 2 kgf-cm (1.7 in-lbf)

Terminal symbols and functions

Terminal Symbol	Terminal Function	Factory Settings (NPN mode) ON: Connect to GND
M0	Multi-function auxiliary input	Refer to Pr.4-04 to Pr.4-08 for programming the Multi-function Inputs. ON: the activation current is 16mA. OFF: leakage current tolerance is 10 μA.
M1	Multi-function input 1	
M2	Multi-function input 2	
M3	Multi-function input 3	
M4	Multi-function input 4	
M5	Multi-function Input 5	
+17V	DC Voltage Source	+17VDC, 20mA used for PNP mode.
GND	Digital Signal Common	Common for digital inputs and used for NPN mode.

Terminal Symbol	Terminal Function	Factory Settings (NPN mode) ON: Connect to GND
AFM	Analog output meter	The voltage output type for this analog signal is PWM, so this analog voltage is only suitable to connect an external movable coil meter, not suitable to connect a digital meter or for A/D signal conversion. 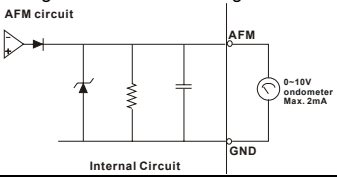
RA	Multi-function Relay output (N.O.) a	Resistive Load: 5A(N.O.)/3A(N.C.) 240VAC 5A(N.O.)/3A(N.C.) 24VDC Inductive Load: 1.5A(N.O.)/0.5A(N.C.) 240VAC 1.5A(N.O.)/0.5A(N.C.) 24VDC Refer to Pr.3-06 for programming
RB	Multi-function Relay output (N.C.) b	
RC	Multi-function Relay common	
MO1	Multi-function Output 1 (Photocoupler)	Maximum 48VDC, 50mA Refer to Pr.3-01 for programming 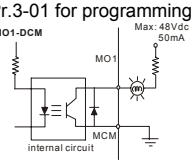
MCM	Multi-function output common	Max. 48Vdc 50mA
+10V	Potentiometer power supply	+10VDC 10mA (variable resistor: 3~5kohm)
AVI	Analog voltage Input (AVI/ACI)	0~+10V/4-20mA corresponds to 0-max. operation frequency (Pr.01-00) PID feedback signal AVI input impedance: 47kohm ACI input impedance: 250kohm 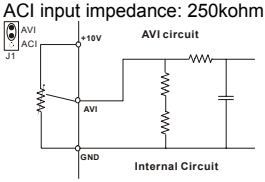 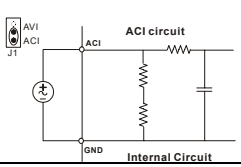

Control signal wiring size: 18 AWG (0.75 mm^2) with shielded wire.

Analog input terminals (AVI, GND)

- Analog input signals are easily affected by external noise. Use shielded wiring and keep it as short as possible (<20m) with proper grounding. If the noise is inductive, connecting the shield to terminal GND can bring improvement.
- If the analog input signals are affected by noise from the AC motor drive, please connect a capacitor (0.1 μF and above) and ferrite core as indicated in the following diagrams:

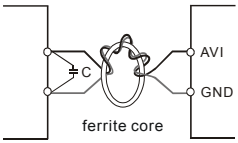

wind each wires 3 times or more around the core

Digital inputs (M0~M5, GND)

- When using contacts or switches to control the digital inputs, please use high quality components to avoid contact bounce.

Digital outputs (MO1, MCM)

- Make sure to connect the digital outputs to the right polarity, see wiring diagrams.
- When connecting a relay to the digital outputs, connect a surge absorber or fly-back diode across the coil and check the polarity.

General

- Keep control wiring as far as possible from the power wiring and in separate conduits to avoid interference. If necessary let them cross only at 90º angle.
- The AC motor drive control wiring should be properly installed and not touch any live power wiring or terminals.

NOTE

- If a filter is required for reducing EMI (Electro Magnetic Interference), install it as close as possible to AC drive. EMI can also be reduced by lowering the Carrier Frequency.
- When using a general GFCI (Ground Fault Circuit Interrupter), select a current sensor with sensitivity of 200mA or above, and not less than 0.1-second detection time to avoid nuisance tripping. For the specific GFCI of the AC motor drive, please select a current sensor with sensitivity of 30mA or above.

DANGER!

Damaged insulation of wiring may cause personal injury or damage to circuits/equipment if it comes in contact with high voltage.

2.4.5 Main Circuit Terminals

VFD002S11A/11B, VFD004S11A/11B

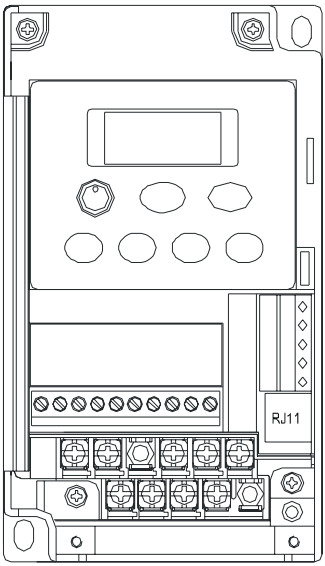

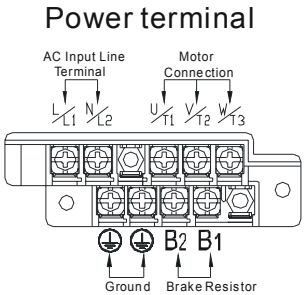

Power Terminal:

Torque: 12 kgf-cm (10 lbf-in)

Wire Gauge: 14-20 AWG (2.1-0.5mm^2)

Wire Type: Copper only, 75°C

VFD002S21B/23A, VFD004S21B/23A/43A/43B/43E, VFD007S21B/23A/43A/43B/43E, VFD015S23D

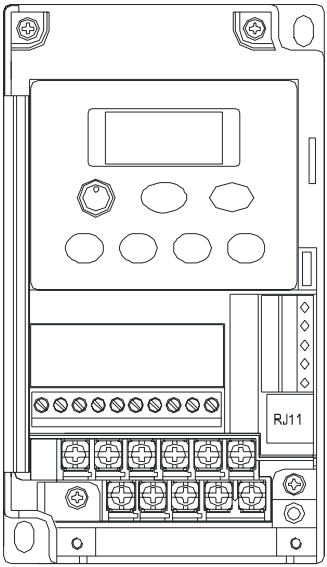

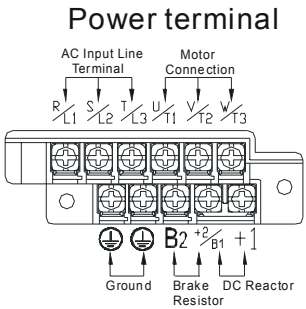

Power Terminal:

Torque: 12 kgf-cm (10 lbf-in)

Wire Gauge: 14-20 AWG (2.1-0.5mm^2)

Wire Type: Copper only, 75°C

VFD002S21A/E, VFD004S21A/E, VFD007S21A/E

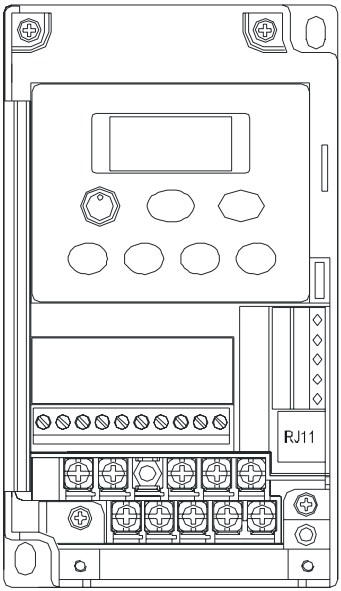

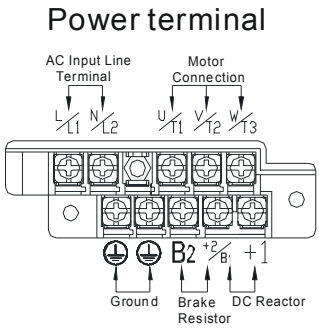

Power Terminal:

Torque: 12 kgf-cm (10 lbf-in)

Wire Gauge: 14-20 AWG (2.1-0.5mm^2)

Wire Type: Copper only, 75°C

VFD007S11A/B

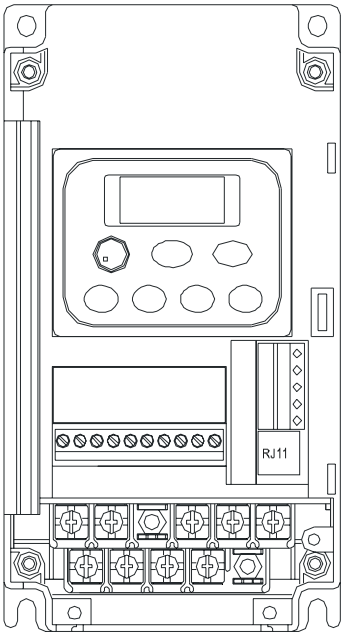

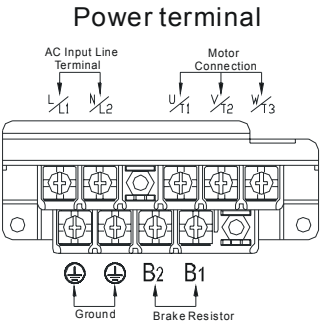

Power Terminal:

Torque: 20 kgf-cm (17.4 lbf-in)

Wire Gauge: 10-18 AWG (5.3-0.8mm^2)

Wire Type: stranded copper only, 75°C

VFD015S21U/43D/43E/43U, VFD022S21U/23D/43D/43E/43U

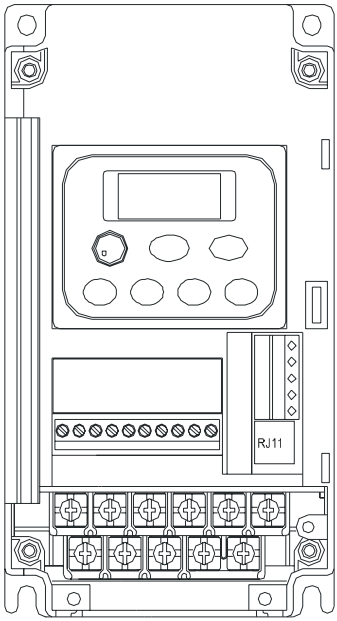

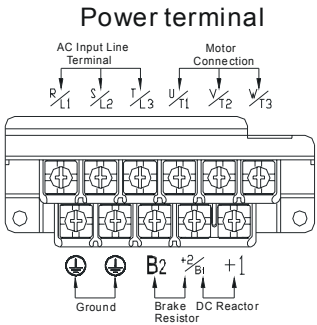

Power Terminal:

Torque: 20 kgf-cm (17.4 lbf-in)

Wire Gauge: 10-18 AWG (5.3-0.8mm^2)

Wire Type: stranded copper only, 75°C

VFD015S21D/E, VFD022S21D/E

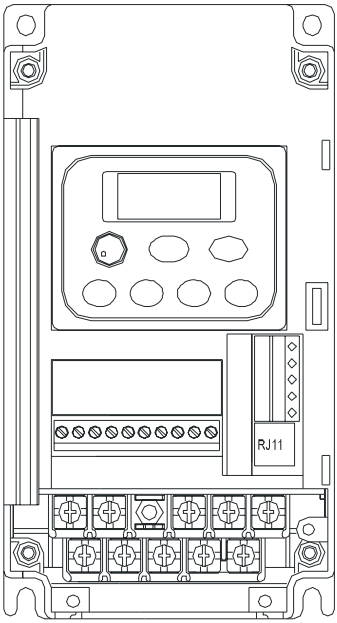

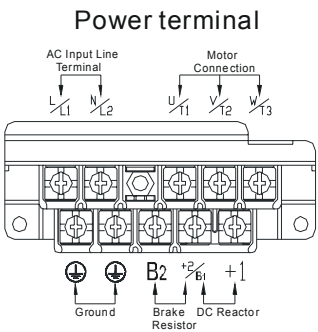

Power Terminal:

Torque: 20 kgf-cm (17.4 lbf-in)

Wire Gauge: 10-18 AWG (5.3-0.8mm^2)

Wire Type: stranded copper only, 75°C

This page intentionally left blank

Chapter 3 Start Up

3.1 Preparations before Start-up

Carefully check the following items before proceeding.

- Make sure that the wiring is correct. In particular, check that the output terminals U/T1, V/T2, W/T3 are NOT connected to power and that the drive is well grounded.
- Verify that there are no short-circuits between terminals and from terminals to ground or mains power.
- Check for loose terminals, connectors or screws.
- Verify that no other equipment is connected to the AC motor.
- Make sure that all switches are OFF before applying power to ensure that the AC motor drive doesn't start running and there is no abnormal operation after applying power.
- Make sure that the front cover is correctly installed before applying power.
- Do NOT operate the AC motor drive with humid hands.
- Check the following items after applying power: The display without digital keypad should be as following.

-The keypad should light up as follows (normal status with no error)

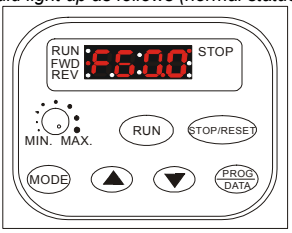

When power is ON, LEDs "STOP" and "FWD" should light up. The display will show "F60.0".

- If the drive has built-in fan, it should run.

3.2 Operation Method

Refer to 4.2 How to operate the digital keypad and chapter 5 parameters for setting. Please choose a suitable method depending on application and operation rule. The operation is usually done as shown in the following table.

Operation Method	Frequency Source	Operation Command Source
Keypad	▲ ▼	RUN STOP/RESET
Operate from external signal	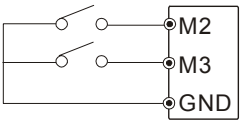 Parameter setting: 4-05=15 4-06=16	External terminals input: M0-GND M1-GND
	AVI, ACI	

3.3 Trial Run

After finishing checking the items in “3.1 preparation before start-up”, you can perform a trial run.

1. After applying power, verify that the display shows “F60.0”.
2. Setting Pr.2-00 to d0, and setting Pr.2-01 to d0 as well. (Refer to Chapter 4 for the operation of the digital keypad.)
3. Setting frequency to about 5Hz by using ▼ key.
4. Pressing RUN key for forward running. And if you want to change to reverse running, you should press ▼ key in Frd page. And if you want to decelerate to stop, please press STOP/RESET key.
5. Check following items:
   - *Check if the motor direction of rotation is correct.*
   - *Check if the motor runs steadily without abnormal noise and vibration.*
   - *Check if acceleration and deceleration are smooth.*

If the results of trial run are normal, please start the formal run.

NOTE

1. Stop running immediately if any fault occurs and refer to the troubleshooting guide for solving the problem.
2. Do NOT touch output terminals U/T1, V/T2, W/T3 when power is still applied to R/L1, S/L2, T/L3 even when the AC motor drive has stopped. The DC-link capacitors may still be charged to hazardous voltage levels, even if the power has been turned off.
3. To avoid damage to components, do not touch them or the circuit boards with metal objects or your bare hands.

This page intentionally left blank

Chapter 4 Digital Keypad Operation

4.1 Description of the Digital Keypad

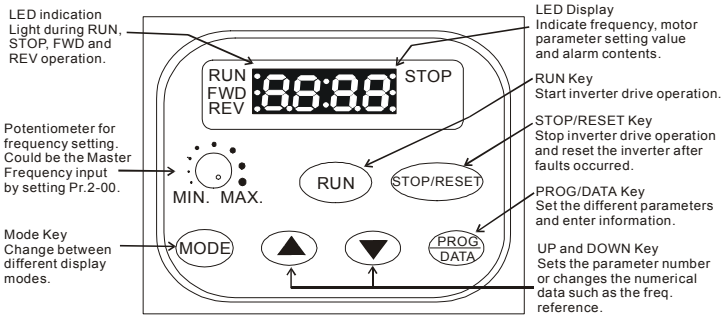

4.2 Explanation of LED Indicators

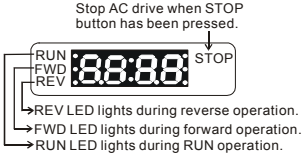

4.3 Explanations of Display Messages

Display Message	Descriptions
F60.0	Displays the AC drive Master Frequency.
H60.0	Displays the actual output frequency at terminals U/T1, V/T2, and W/T3.
u60.0	User defined unit (where U = F x Pr.0-05)
A 5.0	Displays the output current at terminals U/T1, V/T2, and W/T3.

Display Message	Descriptions
1=5.0	The internal PLC process step currently being performed.
U310	Displays the DC-BUS voltage
E220	Displays the output voltage
Frd	Displays the AC motor drive forward run status.
rEv	Displays the AC motor drive reverse run status.
C999	The counter value (C).
0-	Displays the selected group.
0-00	Displays the selected parameter.
d 0	Displays the actual stored value of the selected parameter.
End	Display “End” for approximately one second if input has been accepted. After a parameter value has been set, the new value is automatically stored in memory. To modify an entry, use the ▲ ▼ keys.
Err	Display “Err”, if the input is invalid.

4.4 How to Operate the Digital Keypad

Note： In the selection mode, press PROG DATA to set the parameters.

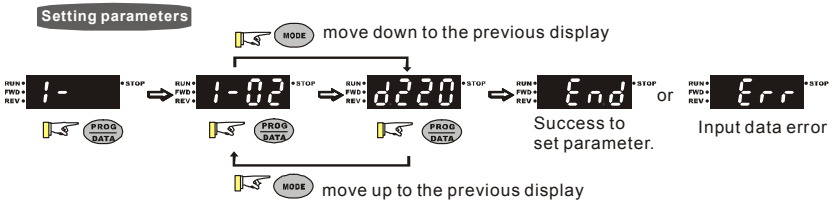

NOTE：In the parameter setting mode, you can press MODE to return the selecting mode.

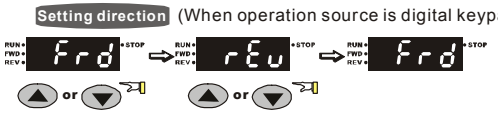

This page intentionally left blank

Chapter 5 Parameters

The VFD-S parameters are divided into 11 groups by property for easy setting. In most applications, the user can finish all parameter settings before start-up without the need for re-adjustment during operation.

The 11 groups are as follows:

Group 0: User Parameters
Group 1: Basic Parameters
Group 2: Operation Method Parameters
Group 3: Output Function Parameters
Group 4: Input Function Parameters
Group 5: Multi-Step Speed and PLC Parameters
Group 6: Protection Parameters
Group 7: Motor Parameters
Group 8: Special Parameters
Group 9: Communication Parameters
Group A: PID Parameters

5.1 Summary of Parameter Settings

✓: The parameter can be set during operation.

Group 0 User Parameters

Pr.	Explanation	Settings	Factory Setting	NOTE
0-00	Identity Code of the AC Motor Drive	Read-only	d #	
0-01	Rated Current Display of the AC Motor Drive	Read-only	d##.#	
0-02	Parameter Reset	d09: All parameters are reset to factory settings (50Hz, 220V/380V) d10: All parameters are reset to factory settings (60Hz, 220V/440V)	d0	
✓0-03	Start-up Display Selection	d0: Display the frequency command value (LED F) d1: Display the actual output frequency (LED H) d2: Multifunction display, see Pr.00-04 d3: Display output current (LED A) d4: Display forward/reverse command (Frd/rEv)	d0	
✓0-04	Content of Multi-Function Display	d0: Display User-Defined Unit (u) d1: Display Counter Value (C) d2: Display Process Operation (1.tt) d3: Display DC-BUS Voltage ($\bar{u}$) d4: Display output voltage (E) d5: Display frequency commands of PID (P) d6: Display analog feedback signal value (b) (%) d7: Display output voltage command (G)	d0	
✓0-05	User-Defined Coefficient K	d0.1 to d160	d1.0	
0-06	Software Version	Read-only	d#.#	
0-07	Password Input	d0 to d999	d0	
0-08	Password Set	d0 to d999	d0	
0-09	Memory Mode Selections	d0 to d63	d8	

Group 1 Basic Parameters

Pr.	Explanation	Settings	Factory Setting	NOTE
1-00	Maximum Output Frequency (Fmax)	d50.0 to d400 Hz	d60.0	
1-01	Maximum Voltage Frequency (Fbase)	d10.0 to d400 Hz	d60.0	
1-02	Maximum Output Voltage (Vmax)	230V series: d2.0V to d255V 460V series: d4.0V to d510V	d220 d440	
1-03	Mid-Point Frequency (Fmid)	d1.0 to d400 Hz	d1.0	

Pr.	Explanation	Settings	Factory Setting	NOTE
1-04	Mid-Point Voltage (Vmid)	230V series: d2.0V to d255V 460V series: d4.0V to d510V	d12 d24	
1-05	Minimum Output Frequency (Fmin)	d1.0 to d60.0 Hz	d1.0	
1-06	Minimum Output Voltage (Vmin)	230V series: d2.0V to d255V 460V series: d4.0V to d510V	d12.0 d24.0	
1-07	Output Frequency Upper Limit	d1 to d110%	d100	
1-08	Output Frequency Lower Limit	d0 to d100%	d0	
✓1-09	Accel Time 1	d0.1 to d600 Sec	d10.0	
✓1-10	Decel Time 1	d0.1 to d600 Sec	d10.0	
✓1-11	Accel Time 2	d0.1 to d600 Sec	d10.0	
✓1-12	Decel Time 2	d0.1 to d600 Sec	d10.0	
✓1-13	Jog Acceleration / Deceleration Time	d0.1 to d600 Sec	d10.0	
✓1-14	Jog Frequency	d1.0 Hz to d400 Hz	d6.0	
1-15	Auto acceleration / deceleration (refer to Accel/Decel time setting)	d0: Linear Accel/Decel d1: Auto Accel, Linear Decel d2: Linear Accel, Auto Decel d3: Auto Accel/Decel (Set by load) d4: Linear Accel; Auto Decel, Stall Prevention during Decel d5: Auto Accel/Decel, Stall Prevention during Decel	d0	
1-16	Acceleration S-Curve	d0 to d7	d0	
1-17	Deceleration S-Curve	d0 to d7	d0	
1-18	✓Jog Decelerating Time	d0.0 Jog Decelerating Time Determined by Pr.1-13 d0.1 to d600	d0.0	

Group 2 Operation Method Parameters

Pr.	Explanation	Settings	Factory Setting	NOTE
2-00	Source of Master Frequency Command	d0: Master Frequency input determined by digital keypad. (record the frequency of power loss and it can do analog overlap plus) d1: Master Frequency determined by analog signal DC 0V-10V (external terminal AVI). (won't record the frequency of power loss and it can't do analog overlap plus) d2: Master Frequency determined by analog signal DC 4mA - 20mA (external terminal AVI). (won't record the frequency of power loss and it can't do analog overlap plus)	d0	

Pr.	Explanation	Settings	Factory Setting	NOTE
2-00	Source of Master Frequency Command	d3: Master Frequency determined by Potentiometer on the digital keypad. (won't record the frequency of power loss and it can do analog overlap plus) d4: Master Frequency operated by RS-485 serial communication interface and record frequency of power loss. (record the frequency of power loss and it can do analog overlap plus) d5: Master Frequency operated by RS-485 serial communication interface and won't record frequency before power loss. (won't record the frequency of power loss and it can do analog overlap plus)	d0	
2-01	Source of Operation Command	d0: Digital Keypad d1: External terminals. Keypad STOP/RESET enabled. d2: External terminals. Keypad STOP/RESET disabled. d3: RS-485 serial communication (RJ-11) .Keypad STOP/RESET enabled. d4: RS-485 serial communication (RJ-11). Keypad STOP/RESET disabled.	d0	
2-02	Stop Method	d0: STOP: ramp to stop; E.F.: coast to stop d1: STOP: coast to stop; E.F.: coast to stop	d0	
2-03	PWM Carrier Frequency Selections	d3: 3KHz d4: 4KHz d5: 5KHz d6: 6KHz d7: 7KHz d8: 8KHz d9: 9KHz d10: 10KHz	d10	
2-04	Motor Direction Control	d0: Enable forward/reverse operation d1: Disable reverse operation	d0	
2-05	Loss of ACI Signal	d0: Decelerate to 0 Hz d1: Coast to stop and display "EF" d2: Continue operation by last frequency command	d0	
2-06	Analog Auxiliary Frequency Operation	d0: Disable d1: Enable + AVI d2: Enable + ACI	d0	

Group 3 Output Function Parameters

Pr.	Explanation	Settings	Factory Setting	NOTE
3-00	Analog Output Signal	d0: analog frequency meter d1: analog current meter	d0	
✓3-01	Analog Output Gain	d1 to d200%	d100	
3-02	Desired Frequency Attained	d1.0 to d400 Hz	d1.0	
3-03	Terminal Count Value	d0 to d999	d0	
3-04	Preliminary Count Value	d0 to d999	d0	
3-05	Multi-Function Output Terminal 1 (Photocoupler Output)	d0: No Function	d1	
3-06	Multi-Function Output Terminal 2 (Relay Output)	d1: AC Drive Operational d2: Master Frequency Attained d3: Zero Speed d4: Over Torque Detection d5: Base-Block (B.B.) Indication d6: Low-Voltage Indication d7: Operation Mode Indication d8: Fault Indication d9: Desired Frequency Attained d10: PLC Program Running d11: PLC Program Step Completed d12: PLC Program Completed d13: PLC Program Operation Paused d14: Terminal Count Value Attained d15: Preliminary Count Value Attained d16: AC Motor Drive Ready d17: FWD command Indication d18: REV command Indication	d8	

Group 4 Input Function Parameters

Pr.	Explanation	Settings	Factory Setting	NOTE
✓4-00	Potentiometer Bias Frequency	d 0.0 to d 100.0%	d0.0	
✓4-01	Potentiometer Bias Polarity	d0: Positive Bias d1: Negative Bias	d0	
✓4-02	Potentiometer Frequency Gain	d1 to d200 %	d100	
4-03	Potentiometer Reverse Motion Enable	d0: Forward Motion Only d1: Reverse Motion enabled	d0	

Pr.	Explanation	Settings	Factory Setting	NOTE
4-04	Multi-Function Input Terminal 1 (M0, M1)	d0: No Function d1: FWD/STOP, REV/STOP d2: FWD/REV, RUN/STOP d3: 3-wire Operation Control Mode d4: E.F. External Fault Input (N.O.) d5: E.F. External Fault Input (N.C.) d6: Reset d7: Multi-Step Speed Command 1 d8: Multi-Step Speed Command 2 d9: Multi-Step Speed Command 3 d10: Jog Operation d11: Accel/decel Inhibit d12: First or Second Acceleration/deceleration Time Selection d13: External base block (N.O.) d14: External base block (N.C.) d15: Up: Increment master frequency d16: Down: Decrement master frequency d17: Run PLC Program d18: Pause PLC Program d19: Counter Trigger Signal d20: Counter Reset d21: Select ACI / Deselect AVI d22: PID Function Disabled d23: JOG FWD d24: JOG REV d25: The source of master frequency is AVI. d26: The source of master frequency is ACI. d27: Press UP/DOWN key to switch forward/reverse (N.O.) motion d28: Press UP/DOWN key to switch forward/reverse (N.C.) motion d29: M0: 0: RUN 1: STOP, M1: no function, Direction is controlled by keypad	d1	
4-05	Multi-Function Input Terminal 2 (M2)		d6	
4-06	Multi-Function Input Terminal 3 (M3)		d7	
4-07	Multi-Function Input Terminal 4 (M4)		d8	
4-08	Multi-Function Input Terminal 5 (M5)		d9	
4-09	Line Start Lockout	d0: Disable d1: Enable	d0	
4-10	Up/Down Mode	d0: Based on accel/decel time d1: Up frequency according to constant speed, down frequency according to deceleration time d2: Up frequency according to acceleration time, down frequenc according to constant speed d3: Constant speed	d3	
4-11	Accel/Decel Rate of Change of UP/DOWN Operation with Constant Speed	0~1000, unit: 5 Hz/sec	d1	

Group 5 Multi-Step Speed and PLC Parameters

Pr.	Explanation	Settings	Factory Setting	NOTE
5-00	1st Step Speed Freq.	d0.0 to d400 Hz	d0.0	
5-01	2nd Step Speed Freq.	d0.0 to d400 Hz	d0.0	
5-02	3rd Step Speed Freq.	d0.0 to d400 Hz	d0.0	
5-03	4th Step Speed Freq.	d0.0 to d400 Hz	d0.0	
5-04	5th Step Speed Freq.	d0.0 to d400 Hz	d0.0	
5-05	6th Step Speed Freq.	d0.0 to d400 Hz	d0.0	
5-06	7th Step Speed Freq.	d0.0 to d400 Hz	d0.0	
5-07	PLC Mode	d0: Disable PLC Operation d1: Execute one program cycle d2: Continuously execute program cycles d3: Execute one program cycle step by step d4: Continuously execute one program cycle step by step d5: Disable PLC operation, but can set direction of 1st speed to 7th speed	d0	
5-08	PLC Forward/ Reverse Motion	d0 to d255 (0: FWD 1: REV)	d0	
5-09	Time Duration of Master Speed	d0 to d65500 Sec	d0	
5-10	Time Duration of 1st Step Speed	d0 to d65500 Sec	d0	
5-11	Time Duration of 2nd Step Speed	d0 to d65500 Sec	d0	
5-12	Time Duration of 3rd Step Speed	d0 to d65500 Sec	d0	
5-13	Time Duration of 4th Step Speed	d0 to d65500 Sec	d0	
5-14	Time Duration of 5th Step Speed	d0 to d65500 Sec	d0	
5-15	Time Duration of 6th Step Speed	d0 to d65500 Sec	d0	
5-16	Time Duration of 7th Step Speed	d0 to d65500 Sec	d0	

Group 6 Protection Parameters

Pr.	Explanation	Settings	Factory Setting	NOTE
6-00	Over-Voltage Stall Prevention	d0: Disable d1: Enable	d1	
6-01	Over-Voltage Stall Prevention Level	115V/230V series: d350 to d410V 460V series: d700 to d820V	d390 d780	
6-02	Over-Current Stall Prevention Level	d20 to d150%	d130	
6-03	Over-Torque Detection Mode	d0: Disabled d1: Enabled during constant speed operation. After the over-torque is detected, keep running until OL1 or OL occurs. d2: Enabled during constant speed operation. After the over-torque is detected, stop running. d3: Enabled during running and continues before Continuous Output Time Limit (Pr.6-05) is reached.	d0	

Pr.	Explanation	Settings	Factory Setting	NOTE
		d4: Enabled during running. After the over-torque is detected, stop running.		
6-04	Over-Torque Detection Level	d30 to d200%	d150	
6-05	Over-Torque Detection Time	d0.1 to d10.0 Sec	d0.1	
6-06	Electronic Thermal Overload Relay Selection	d0 to d2	d2	
✓6-07	Electronic Thermal Characteristic	d30 to d600 Sec	d60	
6-08	Present Fault Record	d0: No fault d1: Over current (oc) d2: Over voltage (ov) d3: Over heat (oH) d4: Over load (oL) d5: Over load (oL1) d6: External fault (EF) d7: Reserved d8: Reserved d9: Excess current during acceleration (ocA) d10: Excess current during deceleration (ocd) d11: Excess current during steady state (ocn) d12: Ground fault (GF) d13: Reserved d14: Low voltage (Lv) d15: CPU failure 1 (cF1) d16: CPU failure 2 (cF2) d17: Base block (b.b.) d18: Overload (oL2) d19: Auto acceleration/deceleration failure (cFA) d20: Software protection enable (codE) d21: Reserved d22: CPU failure (cF3.1) d23: CPU failure (cF3.2) d24: CPU failure (cF3.3) d25: CPU failure (cF3.4) d26: CPU failure (cF3.5) d27: CPU failure (cF3.6) d28: CPU failure (cF3.7) d29: Hardware protection failure (HPF.1) d30: Hardware protection failure (HPF.2) d31: Hardware protection failure (HPF.3) d32: Communication time-out (CE10) d33: Reserved d34: Software error (SErr)	d0	
6-09	Second Most Recent Fault Record			
6-10	Third Most Recent Fault Record			

Pr.	Explanation	Settings	Factory Setting	NOTE
		d35: Reserved d36: PID error (Pld) d37: Reserved d38: Phase loss (PHL)		

Group 7 Motor Parameters

Pr.	Explanation	Settings	Factory Setting	NOTE
✓7-00	Motor Rated Current	d30 to d120%	d85	
✓7-01	Motor No-Load Current	d0 to d90%	d50	
✓7-02	Torque Compensation	d0 to d10	d1	
✓7-03	Slip Compensation	d0.0 to d10.0	d0.0	

Group 8 Special Parameters

Pr.	Explanation	Settings	Factory Setting	NOTE
8-00	DC Brake Voltage Level	d0 to d30%	d0	
8-01	DC Brake Time during Start-Up	d0.0 to d60.0 Sec	d0.0	
8-02	DC Brake time during Stopping	d0.0 to d60.0 Sec	d0.0	
8-03	Start-Point for DC Brake	d0.0 to d400 Hz	d0.0	
8-04	Momentary Power Loss Operation Selection	d0: Operation stops after Momentary Power Loss d1: Operation continues after momentary power loss, speed search starts with the Master Frequency reference value d2: Operation continues after momentary power loss, speed search starts with the minimum frequency	d0	
8-05	Maximum Allowable Power Loss Time	d0.3 to d5.0 Sec	d2.0	
8-06	B.B. Time for Speed Search	d0.3 to d5.0 Sec	d0.5	
8-07	Current Limit for Speed Search	d30 to d200%	d150	
8-08	Skip Frequency 1 Upper Limit	d0.0 to d400 Hz	d0.0	
8-09	Skip Frequency 1 Lower Limit	d0.0 to d400 Hz	d0.0	
8-10	Skip Frequency 2 Upper Limit	d0.0 to d400 Hz	d0.0	
8-11	Skip Frequency 2 Lower Limit	d0.0 to d400 Hz	d0.0	
8-12	Skip Frequency 3 Upper Limit	d0.0 to d400 Hz	d0.0	
8-13	Skip Frequency 3 Lower Limit	d0.0 to d400 Hz	d0.0	
8-14	Auto Restart After Fault	d0 to d10	d0	
8-15	AVR Function	d0: Enable d1: Disable d2: Disable when deceleration	d2	
8-16	Software Brake Level	115V/230V series: d350 to d450V 460V series: d700 to d900V	d380 d760	
8-17	DC Brake Lower Bound Limit	d0.0 to d400 Hz	d0.0	

Group 9 Communication Parameters

Pr.	Explanation	Settings	Factory Setting	NOTE
✓9-00	Communication Address	d1 to d254	d1	
✓9-01	Transmission Speed	d0: Baud Rate 4800 bps d1: Baud Rate 9600 bps d2: Baud Rate 19200 bps d3: Baud Rate 38400 bps	d1	
✓9-02	Transmission Fault Treatment	d0: Warn and Keep Operating d1: Warn and Ramp to Stop d2: Warn and Coast to Stop d3: Keep Operating without Warning	d0	
✓9-03	Time-out Detection	d0: Disable d1 to d20: time setting (1 sec increment)	d0	
✓9-04	Communication Protocol	d0: 7,N,2 (Modbus, ASCII) d1: 7,E,1 (Modbus, ASCII) d2: 7,O,1 (Modbus, ASCII) d3: 8,N,2 (Modbus, ASCII) d4: 8,E,1 (Modbus, ASCII) d5: 8,O,1 (Modbus, ASCII) d6: 8,N,2 (Modbus, RTU) d7: 8,E,1 (Modbus, RTU) d8: 8,O,1 (Modbus, RTU)	d0	

Group A PID Parameters

Pr.	Explanation	Settings	Factory Setting	NOTE
A-00	Input terminal for PID Feedback	d0: Disable PID function d1: Negative PID feedback from external terminal (AVI) 0 to +10V d2: Negative PID feedback from external terminal (ACI) 4 to 20mA d3: Positive PID feedback from external terminal (AVI) 0 to +10V d4: Positive PID feedback from external terminal (ACI) 4 to 20mA	d0	
A-01	Gain over PID Detection value	d0 to d999	d100	
A-02	Proportional Gain (P)	d0 to d999	d100	
A-03	Integral Time (I)	d0 to d999	d100	
A-04	Derivative Control (D)	d0 to d100	d0	
A-05	Upper Bound for Integral Control	d0 to d100%	d100	
A-06	Primary Delay Filter Time	d0 to d999	d0	
A-07	PID Output Freq. Limit	d0 to d110%	d100	
A-08	Feedback Signal Detection Time	d0.0 to d650 seconds	d0.0	

Pr.	Explanation	Settings	Factory Setting	NOTE
A-09	Treatment of the Erroneous Feedback Signals	d0: warn and RAMP to stop d1: warn and COAST to stop	d0	
A-10	Sleep Frequency	d0.0 to d400Hz	d0.0	
A-11	Wakeup Frequency	d0.0 to d400Hz	d0.0	
A-12	Sleep Period	d0.0 to d650 seconds	d0.0	
A-13	PID User Defined	d0.0 to d400	d0.0	

5.2 Parameter Settings for Applications

■ Speed Search

Applications	Purpose	Functions	Related Parameters
Windmill, winding machine, fan and all inertia loads	Restart free-running motor	Before the free-running motor is completely stopped, it can be restarted without detection of motor speed. The AC motor drive will auto search motor speed and will accelerate when its speed is the same as the motor speed.	8-06 8-07

■ DC Brake before Running

Applications	Purpose	Functions	Related Parameters
When e.g. windmills, fans and pumps rotate freely by wind or flow without applying power	Keep the free-running motor at standstill.	If the running direction of the free-running motor is not steady, please execute DC brake before start-up.	8-00 8-01 8-17

■ Multi-step Operation

Applications	Purpose	Functions	Related Parameters
Conveying machinery	Cyclic operation by multi-step speeds.	To control 7-step speeds and duration by simple contact signals.	4-04~4-08 5-00~5-06

■ Switching acceleration and deceleration times

Applications	Purpose	Functions	Related Parameters
Auto turntable for conveying machinery	Switching acceleration and deceleration times by external signal	When an AC motor drive drives two or more motors, it can reach high-speed but still start and stop smoothly.	1-09~1-12 4-04~4-08

■ Operation Command

Applications	Purpose	Functions	Related Parameters
General application	Selecting the source of control signal	Selection of AC motor drive control by external terminals, digital keypad or RS485.	2-01 4-04~4-08

■ Two-wire/three-wire

Applications	Purpose	Functions	Related Parameters
General application	To run, stop, forward and reverse by external terminals	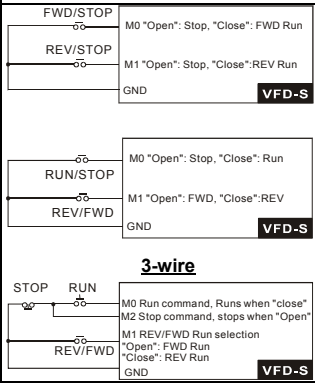	4-04~4-08

■ Frequency Hold

Applications	Purpose	Functions	Related Parameters
General application	Acceleration/ deceleration pause	Hold output frequency during Acceleration/deceleration	4-04~4-08

■ Auto Restart after Fault

Applications	Purpose	Functions	Related Parameters
Air conditioners, remote pumps	For continuous and reliable operation without operator intervention	The AC motor drive can be restarted/reset automatically up to 10 times after a fault occurs.	8-14

■ Emergency Stop by DC Brake

Applications	Purpose	Functions	Related Parameters
High-speed rotors	Emergency stop without brake resistor	AC motor drive can use DC brake for emergency stop when quick stop is needed without brake resistor. When used often, take motor cooling into consideration.	8-00 8-02 8-03

■ **Over-torque Setting**

Applications	Purpose	Functions	Related Parameters
Pumps, fans and extruders	To protect machines and to have continuous/ reliable operation	The over-torque detection level can be set. Once OC stall, OV stall and over-torque occurs, the output frequency will be adjusted automatically. It is suitable for machines like fans and pumps that require continuous operation.	6-03~6-05

■ **Upper/Lower Limit Frequency**

Applications	Purpose	Functions	Related Parameters
Pump and fan	Control the motor speed within upper/lower limit	When user cannot provide upper/lower limit, gain or bias from external signal, it can be set individually in AC motor drive.	1-07 1-08

■ **Skip Frequency Setting**

Applications	Purpose	Functions	Related Parameters
Pumps and fans	To prevent machine vibrations	The AC motor drive cannot run at constant speed in the skip frequency range. Three skip frequency ranges can be set.	8-08~8-13

■ **Carrier Frequency Setting**

Applications	Purpose	Functions	Related Parameters
General application	Low noise	The carrier frequency can be increased when required to reduce motor noise.	2-03

■ **Keep Running when Frequency Command is Lost**

Applications	Purpose	Functions	Related Parameters
Air conditioners	For continuous operation	When the frequency command is lost by system malfunction, the AC motor drive can still run. Suitable for intelligent air conditioners.	2-05

■ **Output Signal during Running**

Applications	Purpose	Functions	Related Parameters
General application	Provide a signal for running status	Signal available to stop braking (brake release) when the AC motor drive is running. (This signal will disappear when the AC motor drive is free-running.)	3-05~3-06

■ **Output Signal in Zero Speed**

Applications	Purpose	Functions	Related Parameters
General application	Provide a signal for running status	When the output frequency is lower than the min. output frequency, a signal is given for external system or control wiring.	3-05~3-06

■ **Output Signal at Desired Frequency**

Applications	Purpose	Functions	Related Parameters
General application	Provide a signal for running status	When the output frequency is at the desired frequency, a signal is given for external system or control wiring.	3-05~3-06

■ **Over-torque Detection**

Applications	Purpose	Functions	Related Parameters
Pumps, fans and extruders	To protect machines and to have continuous/ reliable operation	The over-torque detection level can be set. Once over-torque occurs, a signal will occur to prevent the AC motor drive damage.	3-05~3-06 6-04 6-05

■ **Output Signal at Low-voltage**

Applications	Purpose	Functions	Related Parameters
General application	Provide a signal for running status	When the voltage between P-N is low voltage, a signal is given for external system or control wiring.	3-05~3-06

■ Output Signal when Frequency Attained

Applications	Purpose	Functions	Related Parameters
General application	Provide a signal for running status	When the output frequency is at the desired frequency (by frequency command), a signal is given for external system or control wiring (frequency attained).	3-05~3-06 3-04 3-10

■ Output Signal for Base Block

Applications	Purpose	Functions	Related Parameters
General application	Provide a signal for running status	When executing Base Block, a signal is given for external system or control wiring.	3-05~3-06

■ Overheat Warning for Heat Sink

Applications	Purpose	Functions	Related Parameters
General application	For safety	When heat sink is overheated, it will send a signal for external system or control wiring.	3-05~3-06

■ Multi-function Analog Output

Applications	Purpose	Functions	Related Parameters
General application	Display running status	The value of frequency, output current/voltage can be read by connecting a frequency meter or voltage/current meter.	3-05

5.3 Description of Parameter Settings

Group 0: User Parameters **This parameter can be set during operation.**

0-00 Identity Code of the AC Motor Drive

Settings Read Only Factory setting: d#

0-01 Rated Current Display of the AC motor drive

Settings Read Only Factory setting: d ##.#

Pr. 0-00 displays the identity code of the AC motor drive. The capacity, rated current, rated voltage and the max. carrier frequency relate to the identity code. Users can use the following table to check how the rated current, rated voltage and max. carrier frequency of the AC motor drive correspond to the identity code.

Pr. 0-01 displays the rated current of the AC motor drive. By reading this parameter the user can check if the AC motor drive is correct.

115V/230V Series					
kW	0.2	0.4	0.75	1.5	2.2
HP	0.25	0.5	1.0	2.0	3.0
Pr.0-00	d0	d2	d4	d6	d8
Rated Output Current (A)	1.6	2.5	4.2	7.5	11.0
Max. Carrier Frequency	10kHz				

460V Series				
kW	0.4	0.75	1.5	2.2
HP	0.5	1.0	2.0	3.0
Pr.0-00	d3	d5	d7	d9
Rated Output Current (A)	1.5	2.5	4.2	5.5
Max. Carrier Frequency	10kHz			

0-02 Parameter Reset

Factory Setting: d0

Settings d9 All parameters are reset to factory settings (50Hz, 220V/380V)

d10 All parameters are reset to factory settings (60Hz, 220V/440V)

This setting allows the user to return all parameters to the factory default settings.

0-03 Start-up Display Selection

Factory Setting: d0

Settings d0 Display the frequency command value (LED F)

d1 Display the actual output frequency (LED H)

	d2	Multifunction display, see Pr.0-04
	d3	Display output current (LED A)
	d4	Display forward/reverse command (Frd/rEv)

0-04 ✓Content of Multi-function Display

Factory Setting: d0

Settings	d0	Display the user-defined unit (u)
	d1	Display the counter value (C)
	d2	Display the content of PLC time (1.tt)
	d3	Display the DC BUS voltage (U)
	d4	Display the output voltage (E)
	d5	Display frequency commands of PID (P)
	d6	Display analog feedback signal value (b) (%)
	d7	Display output voltage command (G)

Display the user-defined unit, where unit = H X Pr.0-05.

0-05 ✓User Defined Coefficient K — Unit: 0. 1

Settings d0.1 to d160 — Factory Setting: d1.0

The coefficient K determines the multiplying factor for the user-defined unit.

The display value is calculated as follows:

Display value = (output frequency x K)

The display window is only capable of showing three digits, yet you could use Pr.0-05 to create larger numbers. The display windows uses decimal points to signify numbers up to five digits as illustrated in the following:

Display	Number Represented
999	The absence of a decimal point indicates a three–digit integer.
99.9	A signal decimal point between the middle and the right-most numbers is a true decimal point; it separates ones and tenths as in “30.5” (thirty and one-half).
999.	A single decimal point after the right-most numbers is not a true decimal point, instead it indicates that a zero follows the right-most number. For example, the number 1230 would be displayed as “123.”
99.9.	Two decimal points (one between the middle and the right-most numbers, and one after the right-most number) are not true decimal points; instead they indicate that two zeros follow the right-most number. For example, the number 34500 would be displayed as “34.5.”.

0-06	Software Version	
	Settings	Read Only
	Display	d #.#

0-07	Password Input	Unit: 1
	Settings d0 to d999	Factory Setting: d0

📖 Pr.0-07 and Pr.0-08 work together to provide data security for the AC drive. When Pr.0-08 is set to a value other than 0, a password must be entered to alter the values of parameters. The password is the number set in Pr.0-08, which ranges from 1 to 999. Pr.0-07 is where the password is entered to allow parameter values to be altered.

📖 Display states:

d0: no password / correct password has been input

d1: parameters are locked

0-08	Password Set		Unit: 1
	Settings	d0 to d999	Factory Setting: d0
	Display	0	No password set or successful input in Pr. 0-07
		1	Password has been set

📖 To set a password to protect your parameter settings.

If the display shows 0, no password is set or password has been correctly entered in Pr.0-07.

All parameters can then be changed, including Pr.0-08.

The first time you can set a password directly. After successful setting of password the display will show 1.

Be sure to record the password for later use.

To cancel the parameter lock, set the parameter to 0 after inputting correct password into Pr. 0-07.

The password consists of min. 1 digits and max. 3 digits.

📖 How to make the password valid again after decoding by Pr.0-07:

Method 1: Re-input original password into Pr.0-08 (Or you can enter a new password if you want to use a changed or new one).

Method 2: After rebooting, password function will be recovered.

Password Decode Flow Chart

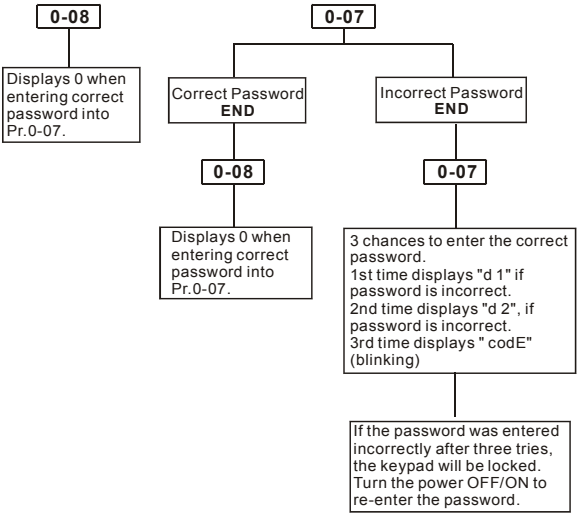

0-09	Memory Mode Selections	Unit: 1
	Settings d0 to d63	Factory Setting: d8

This parameter is determined to save frequency, operation direction and parameter setting after power off or not.

Setting method: input to this parameter after converting binary 6-bit to decimal. Refer to following two tables for detail.

Bit 0	Reserved
Bit 1	0: save frequency
	1: not save frequency
Bit 2	Reserved
Bit 3	0: save direction
	1: not save direction
Bit 4	0: save parameters (except Pr.0-09 and Pr.0-02)
	1: not save parameters
Bit 5	0: save Pr.0-09
	1: not save Pr. 0-09

bit 5	bit4	Bit 3	bit 1	Setting for Pr. 0-09
0	0	0	0	0
			1	2
		1	0	8 (factory setting)
			1	10
	1	0	0	16
			1	18
		1	0	24
			1	26
1	0	0	0	32
			1	34
		1	0	40
			1	42
	1	0	0	48
			1	50
		1	0	56
			1	58

📖 When Pr. 0-09 is set to b5=0, Pr. 0-09 setting will be saved after power on again.

📖 When Pr. 0-02 is set to d10, all parameters (includes Pr.0-09) will be set to factory setting.

Group 1: Basic Parameters

1-00	Maximum Output Frequency (Fmax)	Unit: 0.1
Settings	d50.0 to d400 Hz	Factory Setting: d60.0

This parameter determines the AC motor drive's Maximum Output Frequency. All the AC motor drive frequency command sources (analog inputs 0 to +10V and 4 to 20mA) are scaled to correspond to the output frequency range.

1-01	Maximum Voltage Frequency (Fbase)	Unit: 0.1
Settings	d10.0 to d400 Hz	Factory Setting: d60.0

This value should be set according to the rated frequency of the motor as indicated on the motor nameplate. Maximum Voltage Frequency determines the v/f curve ratio. For example, if the drive is rated for 460 VAC output and the Maximum Voltage Frequency is set to 60Hz, the drive will maintain a constant ratio of 7.66 V/Hz (460V/60Hz=7.66V/Hz). This parameter value must be equal to or greater than the Mid-Point Frequency (Pr.1-03).

1-02	Maximum Output Voltage (Vmax)		Unit: 0.1
Settings	115V/230V series	d2.0 to d255V	Factory Setting: 220.0
	460V series	d4.0 to d510V	Factory Setting: 440.0

This parameter determines the Maximum Output Voltage of the AC motor drive. The Maximum Output Voltage setting must be smaller than or equal to the rated voltage of the motor as indicated on the motor nameplate. This parameter value must be equal to or greater than the Mid-Point Voltage (Pr.1-04).

1-03	Mid-Point Frequency (Fmid)	Unit: 0.1
Settings	d1.0 to d400Hz	Factory Setting: d1.0

This parameter sets the Mid-Point Frequency of the V/f curve. With this setting, the V/f ratio between Minimum Frequency and Mid-Point frequency can be determined. This parameter must be equal to or greater than Minimum Output Frequency (Pr.1-05) and equal to or less than Maximum Voltage Frequency (Pr.1-01).

1-04	Mid-Point Voltage (Vmid)		Unit: 0.1
Settings	115V/230V series	d2.0 to d255V	Factory Setting: d12.0
	460V series	d4.0 to d510V	Factory Setting: d24.0

This parameter sets the Mid-Point Voltage of any V/f curve. With this setting, the V/f ratio between Minimum Frequency and Mid-Point Frequency can be determined. This parameter must be equal to or greater than Minimum Output Voltage (Pr.1-06) and equal to or less than Maximum Output Voltage (Pr.1-02).

1-05	Minimum Output Frequency (Fmin)	Unit: 0.1
	Settings d1.0 to d60.0Hz	Factory Setting: d1.0

This parameter sets the Minimum Output Frequency of the AC drive. This parameter must be equal to or less than Mid-Point Frequency (Pr.1-03).

1-06	Minimum Output Voltage (Vmin)	Unit: 0.1
	Settings 115V/230V series d2.0 to d255V	Factory Setting: d12.0
	460V series d4.0 to d510V	Factory Setting: d24.0

This parameter sets Minimum Output Voltage of the AC drive. This parameter must be equal to or less than Mid-Point Voltage (Pr.1-04).

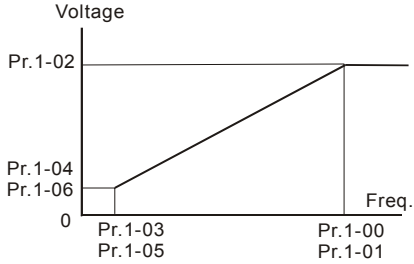

Standard V/F Curve

1-07	Output Frequency Upper Limit	Unit: 1
	Settings d1 to d110%	Factory Setting: d100

This parameter must be equal to or greater than the Output Frequency Lower Limit (Pr.1-08). The Maximum Output Frequency (Pr.1-00) is regarded as 100%.

Output Frequency Upper Limit value = (Pr.1-00 * Pr.1-07)/100.

1-08	Output Frequency Lower Limit	Unit: 1
	Settings d0 to d100%	Factory Setting: d0

The Upper/Lower Limit is to prevent operation error and machine damage.

- If the Upper Limit of Output Frequency is 50Hz and the Maximum Output Frequency is 60Hz, the Maximum Output Frequency will be limited to 50Hz.
- If the Lower Limit of Output Frequency is 10Hz, and the Minimum Output Frequency (Pr.1-05) is set at 1.0Hz, then any Command Frequency between 1-10Hz will generate a 10Hz output from the drive.
- This parameter must be equal to or less than the Upper Limit of Output Frequency (Pr.1-07).

1-09	✓Acceleration Time 1 (Taccel 1)	Unit: 0.1
1-10	✓Deceleration Time 1 (Tdecel 1)	Unit: 0.1
1-11	✓Acceleration Time 2 (Taccel 2)	Unit: 0.1
1-12	✓Deceleration Time 2 (Tdecel 2)	Unit: 0.1
	Settings d0.1 to d600Sec	Factory Setting: d10.0

- Pr.1-9- This parameter is used to determine the time required for the AC drive to ramp from 0 Hz to its Maximum Output Frequency (Pr.1-00). The rate is linear unless S-Curve is "Enabled."
- Pr.1-10. This parameter is used to determine the time required for the AC drive to decelerate from the Maximum Output Frequency (Pr.1-00) down to 0 Hz. The rate is linear unless S-Curve is "Enabled."
- The acceleration/deceleration time 2 determines the time for the AC drive to acceleration/deceleration from 0Hz to Maximum Output Frequency (Pr.1-00) (acceleration/deceleration time 1 is the default). A Multi-Function Input terminal must be programmed to select acceleration/deceleration time 2 and the terminals must be closed to select acceleration/deceleration time 2. See Pr.4-04 to Pr.4-8-
- In the diagram shown below, the acceleration/deceleration time of the AC drive is the time between 0 Hz to Maximum Output Frequency (Pr.1-00). Suppose the Maximum Output Frequency is 60 Hz, start-up frequency (Pr.1-05) is 1.0 Hz, and acceleration/deceleration time is 10 seconds. The actual time for the AC drive to accelerate from start-up to 60 Hz is 9.83 seconds and the deceleration time is also 9.83 seconds.

1-13	✓ Jog Acceleration/Deceleration Time	Unit: 0.1Sec
	Settings d0.1 to d600Sec	Factory Setting: d10.0
1-14	✓ Jog Frequency	Unit: 0.1Hz
	Settings d1.0 to d400Hz	Factory Setting: d6.0

The JOG function can be selected using Multi-function Input terminals (Pr.4-04 to Pr.4-08) if programmed for Jog (d10). When the Jog terminal is “closed”, the AC drive will accelerate from Minimum Output Frequency (Pr.1-05) to Jog Frequency (Pr.1-14). When the Jog terminal “open”, the AC drive will decelerate from Jog Frequency to zero. The acceleration/deceleration time is decided by the Jog acceleration/deceleration time (Pr.1-13). During operation, the AC drive cannot perform Jog command. And during Jog operation, other operation commands cannot be accepted, except command of FORWARD, REVERSE and STOP keys on the digital keypad.

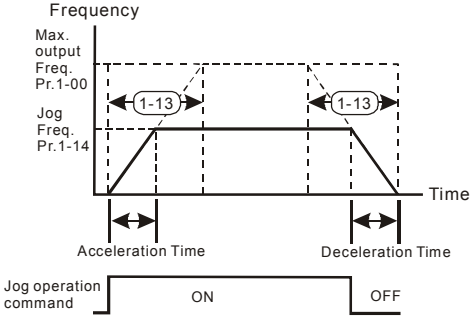

1-15 Auto-Acceleration / Deceleration

Factory Setting: d0

Settings	d0	Linear Accel/Decel
	d1	Auto Accel, Linear Decel
	d2	Linear Accel, Auto Decel
	d3	Auto Accel/Decel (Set by load)
	d4	Linear Accel; Auto Decel, Stall Prevention during Decel
	d5	Auto Accel/Decel, Stall Prevention during Decel

If the auto acceleration/deceleration is selected, the AC drive will acceleration/deceleration in the fastest and smoothest means possible by automatically adjusting the time of acceleration/deceleration.

1-16	Acceleration S-Curve	
1-17	Deceleration S-Curve	
	Settings d0 to d7	Factory Setting: d0

These two parameters allow you to configure whether the acceleration and/or deceleration ramps are linear or S-shaped. The S-curve is enabled when set at d1-d7. Setting d1 offers the quickest S-curve and d7 offers the longest and smoothest S-curve. The AC drive will not follow the acceleration/deceleration time in Pr.1-09 to Pr.1-12. To Disable the S-curve, set Pr.1-16 and Pr.1-17 to d0.

From the diagram shown below, the original setting acceleration/deceleration time will be for reference when the function of the S-curve is enabled. The actual acceleration/deceleration time will be determined based on the S-curve selected (d1 to d7).

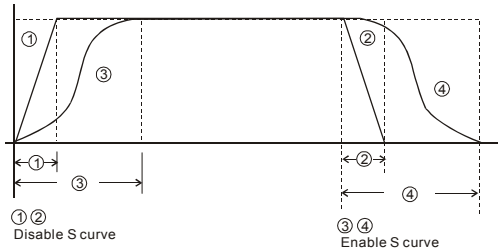

Acceleration/deceleration Characteristics

1-18	⁄ Jog Decelerating Time	Unit: 0.1Sec
	Settings d0.0 to d600	Factory Setting: d0.0

When Pr.1-18 is set to d0.0 Jog decelerating time determined by the setting of Pr.1-13 0.1 to 600 sec, Jog decelerating time can be set independently, separates from Pr.1-13.

When Pr.1-18 is set to 0.0, Pr.1-13 determines both Jog acceleration and deceleration time. When Pr.1-18 is set between 0.1 to 600 seconds, which will determine Jog Decelerating Time and Pr.1-13 will only determine Jog Accelerating Time.

Group 2: Operation Method Parameters

2-00	Source of Master Frequency Command	
		Factory Setting: d0
Settings	d0	Master Frequency input determined by digital keypad. (record the frequency of power loss and it can do analog overlap plus)
	d1	Master Frequency determined by analog signal DC 0V-10V (external terminal AVI). (won't record the frequency of power loss and it can't do analog overlap plus)
	d2	Master Frequency determined by analog signal DC 4mA-20mA (external terminal AVI). (won't record the frequency of power loss and it can't do analog overlap plus)
	d3	Master Frequency determined by Potentiometer on the digital keypad. (won't record the frequency of power loss and it can do analog overlap plus)
	d4	Master Frequency operated by RS-485 serial communication interface and record frequency of power loss. (record the frequency of power loss and it can do analog overlap plus)
	d5	Master Frequency operated by RS-485 serial communication interface and won't record frequency before power loss. (won't record the frequency of power loss and it can do analog overlap plus)

- This parameter sets the Frequency Command Source of the AC drive.
- If the Frequency Command Source is external (DC 0 to +10V or 4 to 20mA), please make sure the (AVI) terminal jumper is in the proper position as shown below.
- Position of jumper: Please open the top cover. It is at the lower-left corner of the panel. The jumper J1 determines the type of external analog input, either DC voltage signal or current signal.

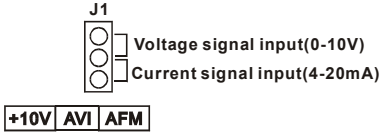

- When setting analog overlap plus, it needs to set Pr. 2-06 to select AVI or ACI.

2-01	Source of Operation Command	
		Factory Setting: d0
Settings	d0	Controlled by the keypad
	d1	External terminals. Keypad STOP/RESET enabled.
	d2	External terminals. Keypad STOP/RESET disabled.
	d3	RS-485 serial communication (RJ-11). Keypad STOP/RESET enabled.
	d4	RS-485 serial communication (RJ-11). Keypad STOP/RESET disabled.

📖 When the AC drive is controlled by an external source, please refer to parameter group 4 for detailed explanations on related parameter settings.

2-02	Stop Method		
			Factory Setting: d0
Settings	d0	STOP: ramp to stop	E.F.: coast to stop
	d1	STOP: coast to stop	E.F.: coast to stop

📖 The parameter determines how the motor is stopped when the AC motor drive receives a valid stop command or detects External Fault.

Ramp: the AC motor drive decelerates to Minimum Output Frequency (Pr.1-05) according to the deceleration time set in Pr.1-10 or Pr.1-12 and then stops.

Coast: the AC motor drive stops the output instantly upon command, and the motor free runs until it comes to a complete standstill.

The motor stop method is usually determined by the characteristics of the motor load and how frequently it is stopped.

(1) It is recommended to use “ramp to stop” for safety of personnel or to prevent material from being wasted in applications where the motor has to stop after the drive is stopped. The deceleration time has to be set accordingly.

(2) If motor free running is allowed or the load inertia is large, it is recommended to select “coast to stop”. For example: blowers, punching machines, centrifuges and pumps.

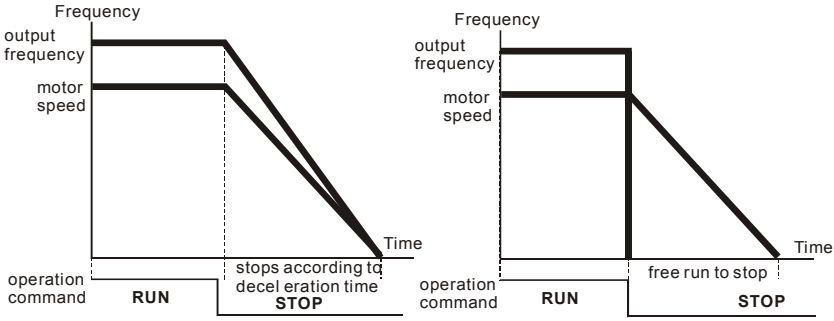

ramp to stop and free run to stop

2-03 PWM Carrier Frequency Selections

Unit: 1

115V/230V/460V Series	
Power	0.25 to 3hp (0.2kW to 2.2kW)
Setting Range	d3 to d10 kHz
Factory Setting	d10 kHz

This parameter determines the PWM carrier frequency of the AC motor drive.

Carrier Frequency	Acoustic Noise	Electromagnetic Noise or leakage current	Heat Dissipation	Current Wave
3kHz	Significant	Minimal	Minimal	Minimal
↕	↕	↕	↕	↕
10kHz	Minimal	Significant	Significant	Significant

From the table, we see that the PWM carrier frequency has a significant influence on the electromagnetic noise, AC motor drive heat dissipation, and motor acoustic noise.

2-04 Motor Direction Control

Factory Setting: d0

Settings	d0	Enable forward/reverse operation
	d1	Disable reverse operation

The parameter determines whether the AC drive can operate in the reverse direction.

2-05	Loss of ACI Signal (4-20mA)

Factory Setting: d0

Settings	d0	Decelerate to 0 Hz
	d1	Coast to stop and display “EF”
	d2	Continue operation by last frequency command

📖 This parameter is only effective when the Source of Frequency is commanded by a 4 to 20mA signal. The ACI input is considered lost when the ACI signal falls below 2mA.

2-06	Analog Auxiliary Frequency Operation

Factory Setting: d0

Settings	d0	Disable
	d1	Enable + AVI (0~10V)
	d2	Enable + ACI (4~20mA)

📖 This parameter is used to determinate that the analog signal to overlap is 0~10V (AVI) or 4~20mA (ACI).

📖 To make sure the short PIN of J1 on the panel is correct position before setting this parameter.

Group 3: Output Function Parameters

3-00	Analog Output Signal (AFM)	
		Factory Setting: d0
Settings	d0	Analog Frequency Meter (0 to Maximum Output Frequency)
	d1	Analog Current Meter (0 to 250% of rated AC motor drive current)

- This parameter sets the function of the AFM output 0~+10VDC (ACM is common).
- The voltage output type for this analog signal is PWM. It needs to read value by the movable coil meter and is not suitable for A/D signal conversion.

3-01	✓Analog Output Gain	Unit: 1
Settings	d1 to d200%	Factory Setting: d100

- The parameter sets the voltage range of the analog output signal at terminals AFM, that corresponds with either the output frequency or the output current of the VFD.

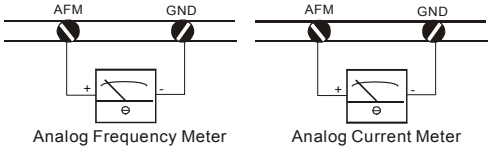

Analog Frequency Meter　　Analog Current Meter

- The analog output voltage is directly proportional to the output frequency of the AC drive. With the factory setting of 100%, the Maximum Output Frequency (Pr.1-00) of the AC drive corresponds to +10VDC analog voltage output. (The actual voltage is about +10VDC, and can be adjusted by Pr.3-01).
- The analog output voltage is directly proportional to the output current of the AC drive. With the factory setting of 100%, the 2.5 times rated current of the AC drive corresponds to +10VDC analog voltage output. (The actual voltage is about +10VDC, and can be adjusted by Pr. 3-01)
- The voltage output type of the output signal at terinals AFM is PWM, so this analog voltage is only suitable to connect an external movable coil meter, not suitable to connect a digital meter or for A/D signal conversion.

NOTE

Voltmeter specification: The sourcing capability of the output is limited to 0.21mA. Sourcing voltage: 10V. Output resistance: 47kΩ.

If the meter reads full scale at a voltage less than 10 volts, then Pr.3-01 should be set by the following formula: Pr.3-01 = ((meter full scale voltage)/10) ×100%

For example: When using the meter with full scale of 5 volts, adjust Pr.3-01 to 50%.

3-02	Desired Frequency Attained	Unit: 0.1
	Settings d1.0 to d400 Hz	Factory Setting: d1.0

🕮 If a multi-function output terminal is set to function as Desired Frequency Attained (Pr.3-05 or 3-06=d9), then the output will be activated when the programmed frequency is attained.

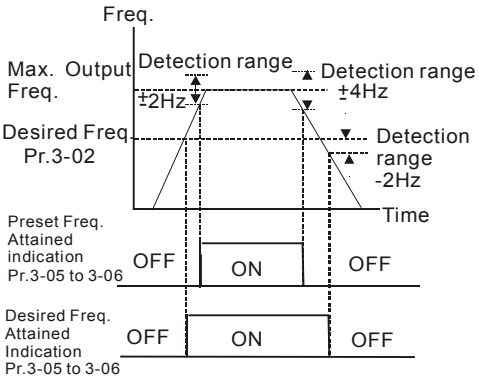

Desired Freq. Attained & Preset Freq. Attained

3-03	Terminal Count Value	Unit: 1
	Settings d0 to d999	Factory Setting: d0

🕮 The parameter determines the upper limit value of the internal counter. The internal counter can be triggered by the external terminal (Pr.4-4 to Pr.4-8, d19). Upon completion of counting, the specified output terminal will be activated. (Pr.3-05, Pr.3-06, d14).

3-04	Preliminary Count Value	Unit: 1
	Settings d0 to d999	Factory Setting: d0

🕮 When the counter value is counted up from “1” to the setting value of this parameter, the corresponding multi-function output terminal which set to d15 as Preliminary Counter Value Attained will be closed**.** The application can be that closing the multi-function output terminal makes the AC drive operate at low speed until stop before the counting value is going to be attained.

🕮 The timing diagram is shown below:

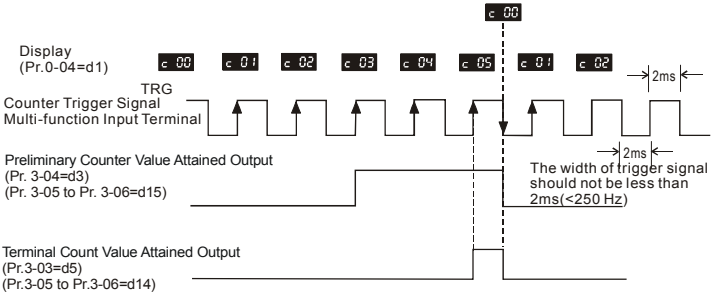

3-05 Multi-function Output Terminal 1 (Photocoupler output)

Factory Setting: d1

3-06 Multi-function Output Terminal 2 (relay output)

Factory Setting: d8

Settings d0 to d18

Setting	Function	Description
d0	No Function	
d1	AC Drive Operational	the output terminal will be activated when the drive is running.
d2	Master Frequency Attained	the output will be activated when the AC drive attains Maximum Output Frequency.
d3	Zero Speed	the output will be activated when Command Frequency is lower than the Minimum Output Frequency.
d4	Over Torque Detection	the output will be activated as long as the over-torque is detected. Pr.6-04 determines the Over-Torque detection level.
d5	Base-Block (B.B.) Indication	the output will be activated when the output of the AC drive is shut off by external Baseblock.
d6	Low-Voltage Indication	the output will be activated when low voltage is detected.
d7	Operation Mode Indication	the output will be activated when the operation of the AC drive is controlled by External Control Terminals.
d8	Fault Indication	the output will be activated when faults occur (oc, ov, oH, oL, oL1, EF, cF3, HPF, ocA, ocd, ocn, GF).
d9	Desired Frequency Attained	the output will be activated when the desired frequency (Pr.3-02)is attained.

Setting	Function	Description
d10	PLC Program Running	the output will be activated when the PLC program is running.
d11	PLC Program Step Completed	the output will be activated for 0.5 sec. when each multi-step speed is attained.
d12	PLC Program Completed	the output will be activated for 0.5 sec. when the PLC program cycle has completed.
d13	PLC Operation Paused	the output will be activated when PLC operation is paused.
d14	Terminal Count Value Attained	counter reaches Terminal Count Value.
d15	Preliminary Counter Value Attained	counter reaches Preliminary Count Value.
d16	AC Motor Drive Ready	
d17	FWD Command Indication	When AC drive receives the command of forward running, it will output immediately no matter AC drive is in the state of run or stop.
d18	REV Command Indication	When AC drive receives the command of reverse running, it will output immediately no matter AC drive is in the state of run or stop.

Group 4: Input Function Parameters

4-00	✓ Potentiometer Bias Frequency		Unit: 0. 1
	Settings	d0.0 to d100.0%	Factory Setting: d0.0
4-01	✓ Potentiometer Bias Polarity		
			Factory Setting: d0
	Settings	d0 Positive Bias	
		d1 Negative Bias	
4-02	✓ Potentiometer Frequency Gain		Unit: 1
	Settings	d1 to d200%	Factory Setting: d100
4-03	Potentiometer Reverse Motion Enable		
			Factory Setting: d0
	Settings	d0 Forward motion only	
		d1 Reverse motion enable (must be negative bias)	

📖 Pr.4-00 to Pr.4-03 are used when the source of frequency command is the analog signal (0 to +10V DC or 4 to 20 mA DC). Refer to the following examples.

Example 1:

The following is the most common method. Set parameter 2-00 to d1 (0 to +10V signal) or d2 (4 to 20mA current signal).

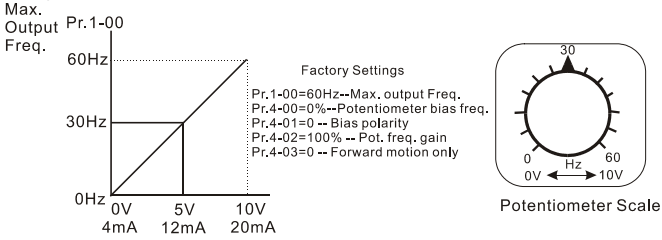

Example 2:

In this example with the potentiometer set to 0V the Output Frequency is 10 Hz. The mid-point of the potentiometer becomes 40 Hz. Once the Maximum Output Frequency is reached any further increase of the potentiometer will not increase output frequency.

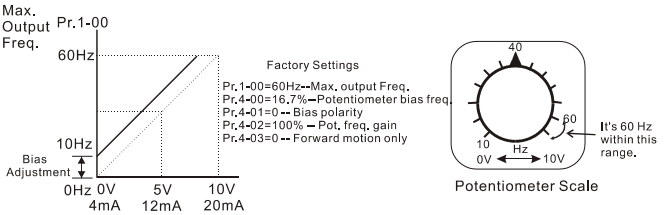

Example 3:

The example also shows the popular method. The whole scale of the potentiometer can be used as desired. In addition to signals of 0 to 10V and4 to 20mA, the popular voltage signals also include signals of 0 to 5V, 20 to 4mA or that under 10V. Regarding the setting, please refer to the following examples.

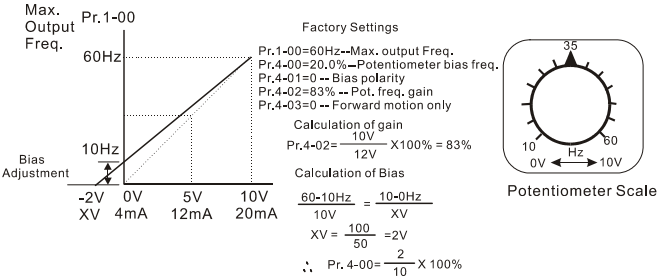

Example 4:

This example shows a potentiometer range of 0 to 5 Volts.

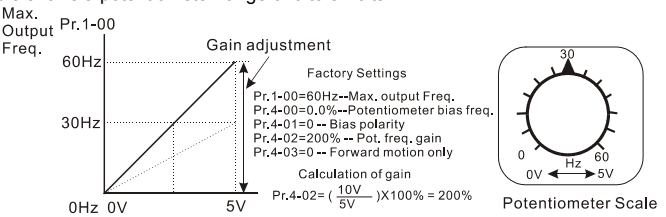

Example 5:

In this example a 1 volt negative bias is used. In a noise environment, it is advantageous to use negative bias to provide a noise margin (1V in this example).

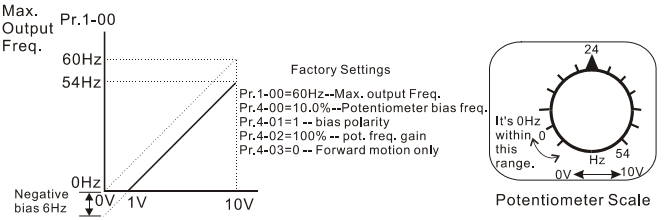

Example 6:

In this example, a negative bias is used to provide a noise margin. Also a potentiometer frequency gain is used to allow the Maximum Output Frequency to be reached.

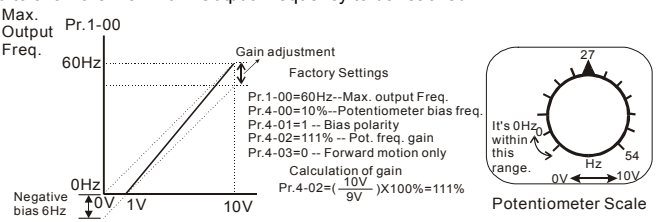

Example 7:

In this example, the potentiometer is programmed to run a motor is both forward and reverse direction. A motor will be idle when the potentiometer position is at mid-point of its scale. Using Pr.4-03 will disable the external FWD and REV controls.

Example 8:

In this example, the option of anti-slope is shown. Anti-slope is used in an application where control of pressure, temperature, or flow is needed. Under a high pressure or flow situation, a sensor will generate a large signal such as 20 mA or 10V. With anti-slope enable, the large signal will slow or stop the AC drive.

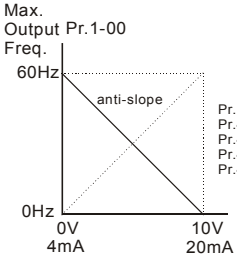

Factory Settings

Pr.1-00=60Hz--Max. output Freq.
Pr.4-00=60Hz--Potentiometer bias freq.
Pr.4-01=1 -- bias polarity
Pr.4-02=100% -- pot. freq. gain
Pr.4-03=1 -- pot. REV. motion enable

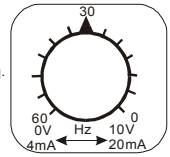

Potentiometer Scale

4-04	Multi-function Input Terminal (M0, M1)

Settings d0 to d29 (Only M1 can be set to d0~d29) Factory Setting: d1

4-05	Multi-function Input Terminal (M2)

Factory Setting: d6

4-06	Multi-function Input Terminal (M3)

Factory Setting: d7

4-07	Multi-function Input Terminal (M4)

Factory Setting: d8

4-08	Multi-function Input Terminal (M5)

Factory Setting: d9

Parameters & Functions table:

Value	Function	Value	Function
d0	No Function	d15	Up: Increment master frequency
d1	M0: FWD / STOP, M1: REV / STOP	d16	Down: Decrement master frequency
d2	M0: RUN / STOP, M1: FWD / REV	d17	Run PLC Program
d3	3-Wire Operation Control mode (M0, M1, M2)	d18	Pause PLC Program
d4	External Fault (Normally Open)	d19	Counter Trigger Signal
d5	External Fault (Normally Closed)	d20	Counter Reset
d6	External Reset	d21	Select ACI / Deselect AVI (the priority is higher than Pr. 2-00 and d26)
d7	Multi-Step Speed Command1	d22	PID function disable
d8	Multi-Step Speed Command2	d23	JOG FWD
d9	Multi-Step Speed Command3	d24	JOG REV
d10	Jog operation	d25	The source of master frequency is AVI. (The priority is higher than Pr. 2-00 and d26)
d11	Acceleration/Deceleration Speed Inhibit	d26	The source of master frequency is ACI. (The priority is higher than Pr. 2-00)
d12	First or Second Acceleration or Deceleration Time Selection	d27	Press UP/DOWN key to switch forward/reverse (N.O.) motion
d13	External Base Block (N.O.) (Normally Open Contact Input)	d28	Press UP/DOWN key to switch forward/reverse (N.C.) motion
d14	External Base Block (N.C.) (Normally Close Contact Input)	d29	M0: 0: RUN 1: STOP, M1: no function, Direction is controlled by keypad

Explanations:

d0 Parameter Disable:

Enter value (d0) to disable any Multi-Function Input Terminal: M1 (Pr.4-04), M2 (Pr.4-05), M3 (Pr.4-06), M4 (Pr.4-07) or M5 (Pr.4-08).

NOTE

The purpose of this function is to provide isolation for unused Multi-Function Input Terminals. Any unused terminals should be programmed to d0 to insure they have no effect on drive operation.

d1 Two wire operation: Restricted to Pr.4-04 and external terminals M0, M1.

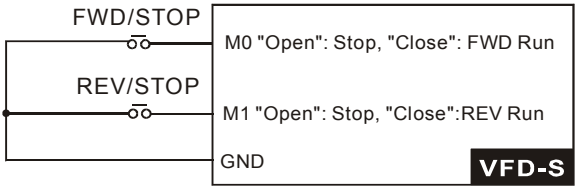

d2 Two wire operation: Restrict to Pr. 4-04 and external terminals M0, M1.

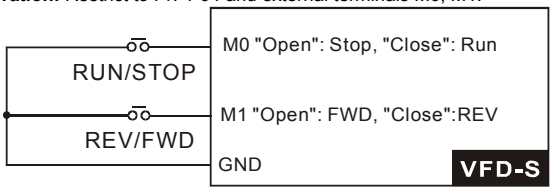

NOTE

Multi-function Input Terminal M0 does not have its own parameter designation. M0 must be used in conjunction with M1 to operate two and three wire control.

d3 Three Wire Control: Restricted to Pr.4-04 control terminals M0, M1, M2.

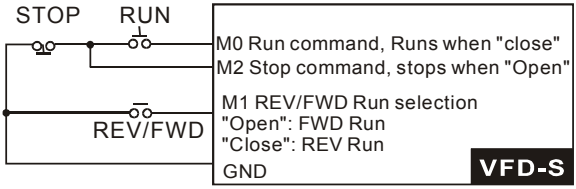

NOTE

When value d3 is selected for Pr. 4-04, this will over ride any value entered in Pr.4-05, since Pr.4-05 must be used for three wire control as shown above.

d4, d5 External Faults:

Parameter values d4, d5 programs Multi-Function Input Terminals: M1 (Pr. 4-04), M2 (Pr. 4-05), M3 (Pr. 4-06), M4 (Pr. 4-07) or M5 (Pr. 4-08) to be External Fault (E.F.) inputs.

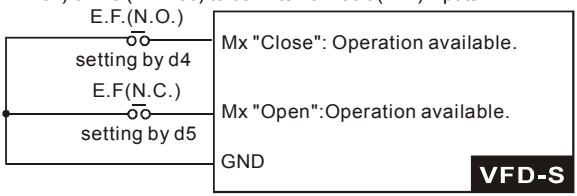

NOTE

When an External Fault input signal is received, the AC drive will stop all output and display " E.F." on Digital Keypad, the motor will free run. Normal operation can resume after the External Fault is cleared and the AC drive is reset.

d6 External Reset:

Parameter value d6 programs a Multi-Function Input Terminal: M1 (Pr.4-04), M2 (Pr.4-05), M3 (Pr.4-06), M4 (Pr.4-07) or M5 (Pr.4-08) to be an External Reset.

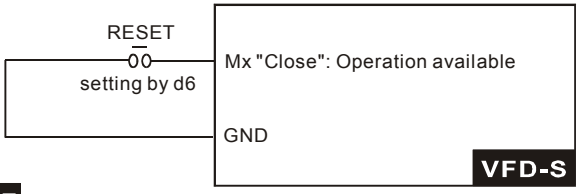

NOTE

the External Reset has the same function as the Reset key on the Digital keypad. After external fault such as O.H., O.C. and O.V. are clear, this input can be used to reset the drive.

d7, d8, d9 Multi-Step Speed Command:

Parameter values d7, d8, d9 programs any three of the following Multi-Function Input Terminals: M1 (Pr.4-04), M2 (Pr.4-05), M3 (Pr.4-06), M4 (Pr.4-07) or M5 (Pr.4-08) for multi-step speed command function.

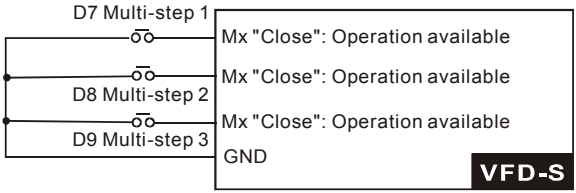

These three inputs select the multi-step speeds defined by Pr.5-00 to Pr.5-06 as shown in the following diagram. Pr.5-07 to Pr.5-16 can also control output speed by programming the AC drive's internal PLC function.

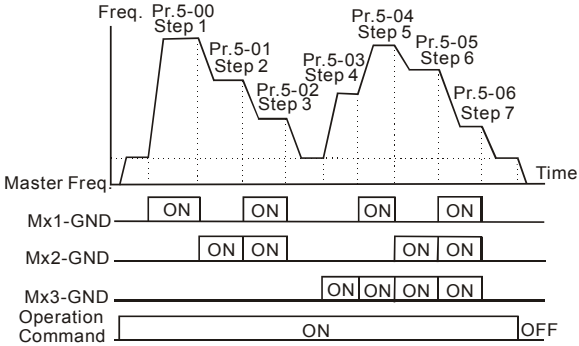

d10 Jog Operation Control:

Parameter value d10 programs Multi-Function Input Terminal: M1 (Pr.4-04), M2 (Pr.4-05), M3 (Pr.4-06), M4 (Pr.4-07) or M5 (Pr.4-08) for Jog control.

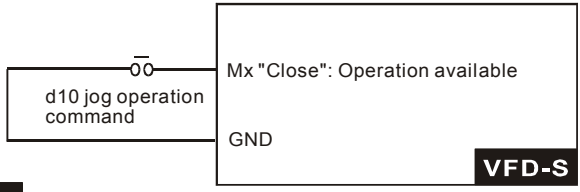

NOTE

Jog operation programmed by d10 can only be initiated while the motor is stopped. (Refer to Pr.1-13, Pr.1-14.)

d11 Acceleration/Deceleration Speed Inhibit:

Parameter value d11 programs Multi-Function Input Terminal: M1 (Pr.4-04), M2 (Pr.4-05), M3 (Pr.4-06), M4 (Pr.4-07) or M5 (Pr.4-08) for Acceleration/deceleration Inhibit. When the command is received, acceleration and deceleration is stopped and the AC drive maintains a constant speed.

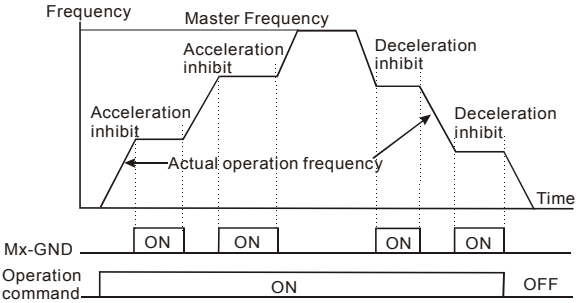

d12 First or Second Acceleration/Deceleration Time Selection:

Parameter value d12 programs a Multi-Function Input Terminal: M1 (Pr.4-04), M2 (Pr.4-05), M3 (Pr.4-06), M4 (Pr.4-07) or M5 (Pr.4-08) to control selection of First or Second Acceleration/deceleration time. (Refer to Pr.1-09 to Pr.1-12.)

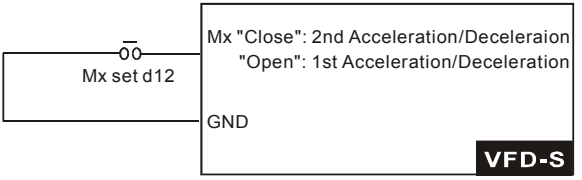

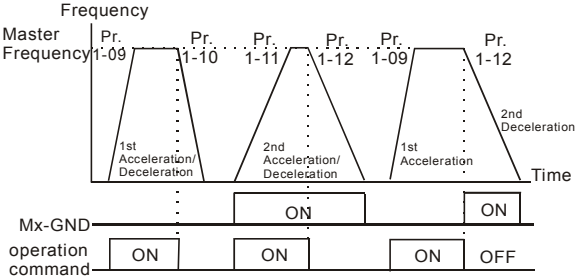

d13, d14 External Base Block:

Parameter values d13, d14 program Multi-Function Input Terminals: M1 (Pr.4-04), M2 (Pr.4-05), M3 (Pr.4-06), M4 (Pr.4-07) or M5 (Pr.4-08) for external Base Block control. Value d13 is for normally open (N.O.) input, and value d14 is for a normally closed (N.C.) input.

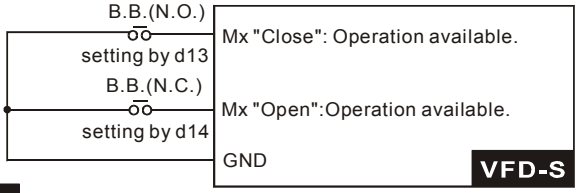

NOTE

When a Base-Block signal is received, the AC drive will stop all output and the motor will free run. When base block control is deactivated, the AC drive will start its speed search function and synchronize with the motor speed, and then accelerate to Master Frequency.

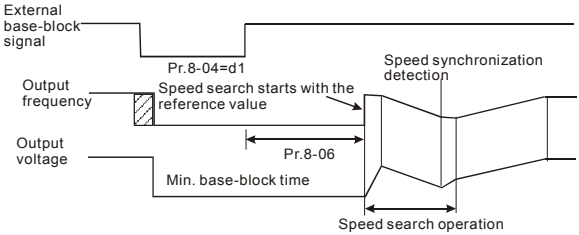

d15, d16 Increase/Decrease Master Frequency:

Parameter values d15, d16 program the Multi-Function Input Terminals: M1 (Pr.4-04), M2 (Pr.4-05), M3 (Pr.4-06), M4 (Pr.4-07) or M5 (Pr.4-08) to incrementally increase/ decrease the Master Frequency each time an input is received.

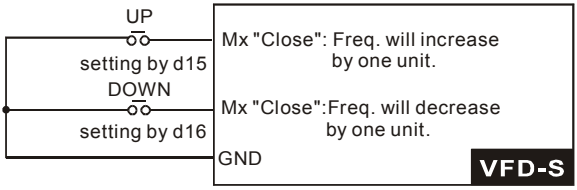

d17, d18 PLC Function Control:

Parameter value d17 programs Multi-Function Input Terminal: M1 (Pr.4-04), M2 (Pr.4-05), M3 (Pr.4-06), M4 (Pr.4-07) or M5 (Pr.4-08) to enable the AC drive internal PLC program. Parameter value d18 programs an input terminal to pause the PLC program.

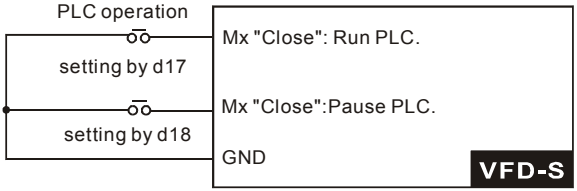

NOTE

Pr.5-00 to Pr.5-16 define the PLC program.

d19 Counter Trigger:

Parameter value d19 programs Multi-Function Input Terminal: M1 (Pr.4-04), M2 (Pr.4-05), M3 (Pr.4-06), M4 (Pr.4-07) or M5 (Pr.4-08) to increase the AC drive's internal counter. When an input is received, the counter is increased by 1.

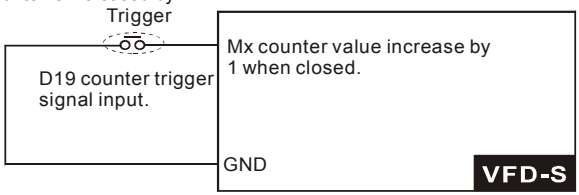

NOTE

The Counter Trigger input can be connected to an external Pulse Signal Generator to count a processing step or unit of material. See the diagram below.

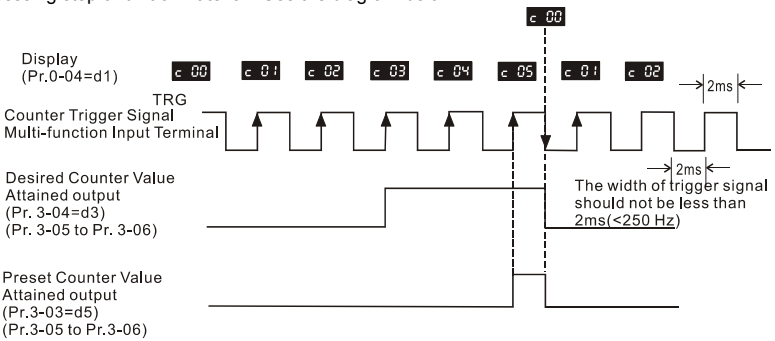

d20 Counter Reset:

Parameter value d20 programs Multi-Function Input Terminal: M1 (Pr.4-04), M2 (Pr. 4-05), M3 (Pr.4-06), M4 (Pr.4-07) or M5 (Pr.4-08) to reset the counter.

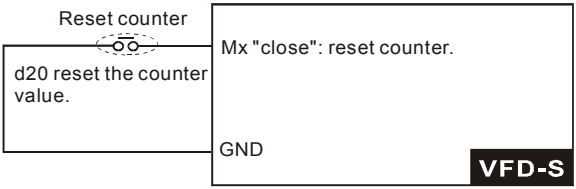

d21 Select ACI / Deselect AVI:

Parameter value d21 allows the user to select the input type ACI or AVI via an external switch. AVI is selected when the contact is open and ACI is selected when the contact is closed. Please note: the use of this feature will override Pr.2-00 programming and the jumper of the front of the drive must be moved to the correct location either across the AVI or ACI pin head.

d22 PID function disable:
When input ON with this setting, PID function will be disabled.

d23 JOG FWD:
This function could be operated only when the AC motor drive is stop. The operation direction is forward, which can't be changed. And it can be stopped by the STOP key on the keypad. When the contact is OFF, the AC motor drive will stop by the JOG decel time. Refer to the Pr.1-13 and Pr. 1-14 for detail.

d24 JOG REV:
This function could be operated only when the AC motor drive is stop. The operation direction is reverse, which can't be changed. And it can be stopped by the STOP key on the keypad. When the contact is OFF, the AC motor drive will stop by the JOG decel time. Refer to the Pr.1-13 and Pr. 1-14 for detail.

d25 The source of master frequency is AVI. (The priority is higher than Pr. 2-00 and d26)

d26 The source of master frequency is ACI. (The priority is higher than Pr. 2-00)

d27 Press UP/DOWN key to switch forward/reverse (N.O.) motion:
When this function is enabled, press ▲ key for forward motion and ▼ key to REV (N.O.) motion. The keys MODE and PROG/DATA will be disabled.

d28 Press UP/DOWN key to switch forward/reverse (N.C.) motion:
When this function is enabled, press ▲ key for forward motion and ▼ key to REV (N.C.) motion. The keys MODE and PROG/DATA will be disabled.

d29 M0: 0: RUN 1: STOP, M1: no function, Direction is controlled by keypad

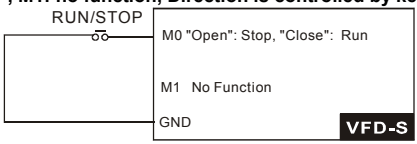

4-09	Line Start Lockout

Factory Setting: d0

Settings	d0	Disable
	d1	Enable

When enabled, the AC drive will not start when powered up with run commands applied. To start in Line Start Lockout mode, the AC drive must see the run command go from stop to run after power up. When Line Start Lockout is disable (also known as Auto-Start), the drive will start when powered-up with run commands applied.

4-10	Up/Down Mode

Factory Setting: d0

Settings	d0	Based on accel/decel time
	d1	up frequency according to constant speed, down frequency according to deceleration time
	d2	up frequency according to acceleration time, down frequency according to constant speed
	d3	Constant speed

4-11	Accel/Decel Rate of Change of UP/DOWN Operation with Constant Speed	Unit: 5

Settings d0 to d1000 Hz/sec Factory Setting: d1

This parameter is used to set the acceleration/deceleration speed mode when multi-function terminal is set to up/down frequency. (Pr. 4-04 ~ Pr.4-08, function d15, d16)

Group 5: Multi-step Speeds and PLC (Process Logic Control) Parameters

5-00	✓1st Step Speed Frequency	Unit: 0.01
5-01	✓2nd Step Speed Frequency	Unit: 0.01
5-02	✓3rd Step Speed Frequency	Unit: 0.01
5-03	✓4th Step Speed Frequency	Unit: 0.01
5-04	✓5th Step Speed Frequency	Unit: 0.01
5-05	✓6th Step Speed Frequency	Unit: 0.01
5-06	✓7th Step Speed Frequency	Unit: 0.01
	Settings d0.0 to d400 Hz	Factory Setting: 0.00

📖 The Multi-Function Input Terminals (refer to Pr.4-04 to 4-08) are used to select one of the AC drive Multi-Step speeds. The speeds (frequencies) are determined by Pr.5-00 to 5-06 shown above.

5-07	PLC Mode

Factory Setting: d0

Settings	d0	Disable PLC operation
	d1	Execute one program cycle
	d2	Continuously execute program cycles
	d3	Execute one program cycle step by step
	d4	Continuously execute program cycles step by step
	d5	Disable PLC operation, but can set direction of 1st speed to 7th speed

📖 This parameter selects the mode of PLC operation for the AC drive. The PLC program can be used in lieu of any External Controls, Relays or Switches. The AC drive will change speeds and directions according to the user's desired programming.

📖 When this parameter is set to d5 and it is running by external multi-speed, the high priority of the operation direction is Pr. 5-08.

Example 1 (Pr.5-07 = d1): Execute one cycle of the PLC program. Its relative parameter settings are:

1. Pr.5-00 to 5-06: 1st to 7th step speed (sets the frequency of each step speed).
2. Pr.4-04 to 4-08: Multi-Function Input Terminals (set one multi-function terminal as d17- PLC auto-operation).
3. Pr.3-05 to 3-06: Multi-Function Output Terminals (set a Multi-Function Terminal as d10-PLC operation indication, d11-one cycle in PLC auto mode or d12-PLC operation fulfillment attainment).
4. Pr.5-07: PLC mode.
5. Pr.5-08: Direction of operation for Master Frequency and1st to 7th step speed.
6. Pr.5-09 to 5-16: operation time setting of Master Frequency and1st to 7th step speed.

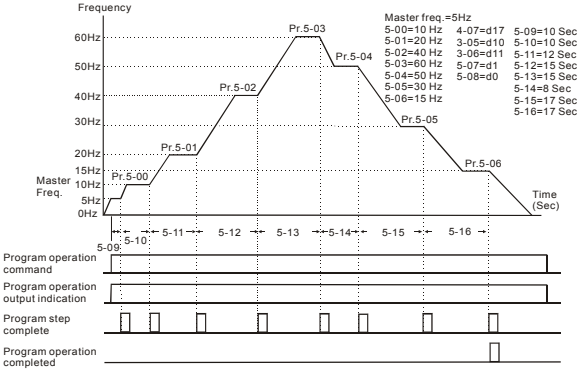

NOTE

The above diagram shows one complete PLC cycle. To restart the cycle, turn the PLC program off and then back on.

Example 2 (Pr.5-07 = d2): Continuously executes program cycles

The diagram below shows the PLC program stepping through each speed and the automatically starting again. To stop the PLC program, one must either pause the program or turn it off (Refer to Pr.4-05 to 4-08 value d17 and d18).

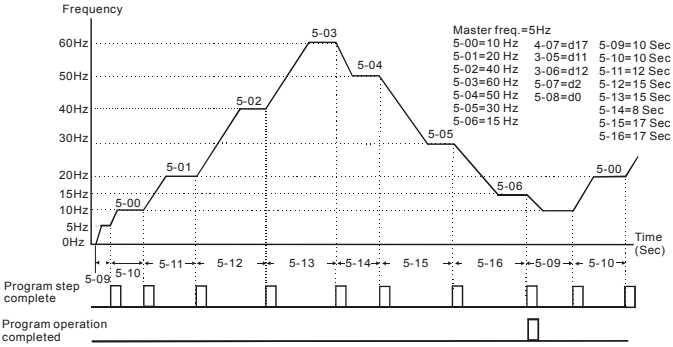

Example 3 (Pr. 5-07 = d3) Execute one cycle step by step:

The example shows how the PLC can perform one cycle at a time, within a complete cycle. Each step will use the acceleration/deceleration times in Pr.1-09 to Pr.1-12. It should be noticed that the time each step spends at its intended frequency is diminished, due to the time spent during acceleration/deceleration.

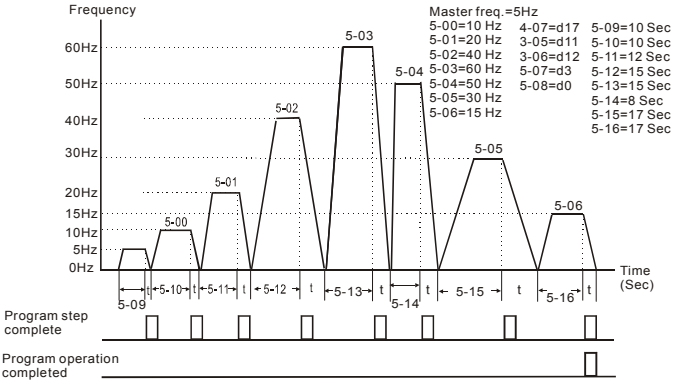

Example 4 (Pr. 5-07 =d4) Continuously execute PLC cycles step by step:

In this explanation, the PLC program runs continuously step by step. Also shown are examples of steps in the Reverse direction.

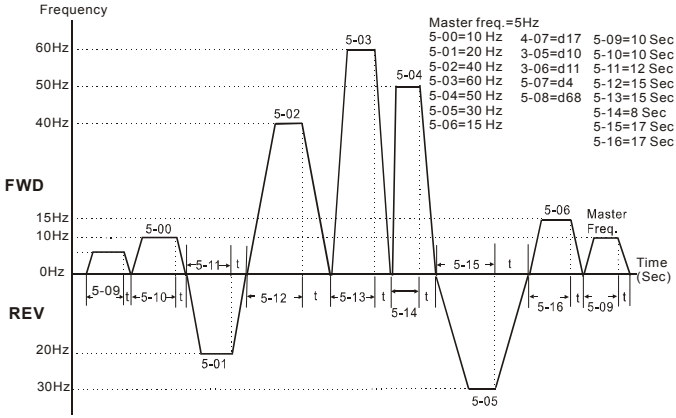

Example 5 (Pr. 5-07 = d1 Execute one cycle of the PLC program):

In this example, the PLC program runs continuously. It should be noted that the times of reserve motion may be shorter than expected, due to the acceleration/deceleration times.

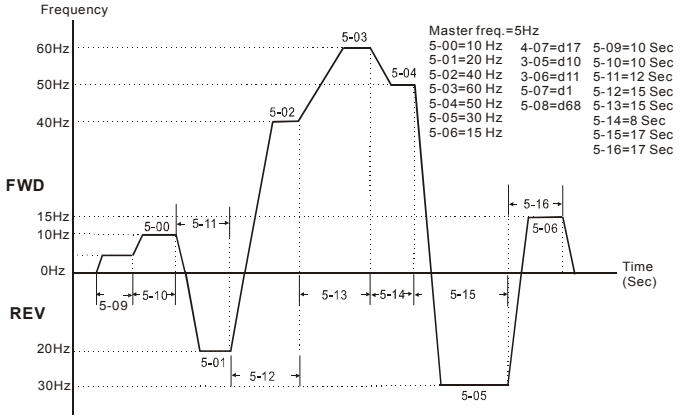

* The calculation of time for Pr.5-11, Pr.5-12, Pr.5-15 and Pr.5-16 should be carefully planned.

5-08	PLC Forward/Reverse Motion	Unit: 1
	Settings d0 to d255	Factory Setting: d0

This parameter controls the direction of motion for the Multi-Step Speed Pr.5-00 to Pr.5-06 and the Master Frequency. The original direction of Master Frequency will become invalid.

NOTE

The equivalent 8-bit number is used to program the forward/reverse motion for each of the 8 speed steps (including Master Frequency). The binary notation for the 8-bit number must be translated into decimal notation and then be entered.

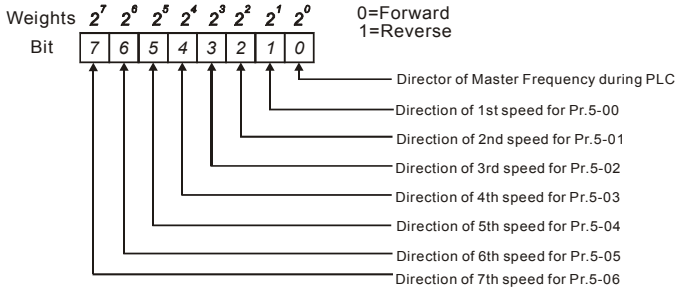

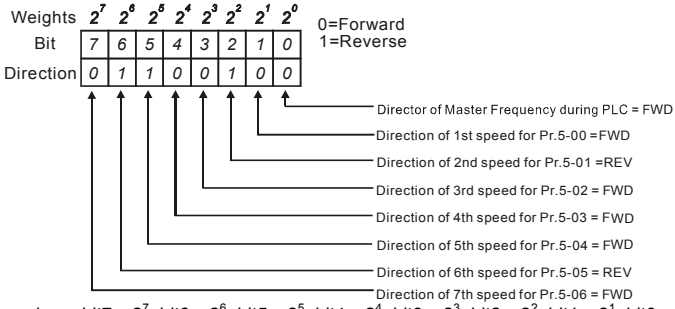

The setting value = bit7 x 2^7+bit6 x 2^6+bit5 x 2^5+bit4 x 2^4+bit3 x 2^3+bit2 x 2^2+bit1 x 2^1+bit0 x 2^0

= 0 x 2^7+1 x 2^6+0 x 2^5+0 x 2^4+0 x 2^3+1 x 2^2+0 x 2^1+0 x 2^0

= 0+64+0+0+0+4+0+0

= 68

Setting Pr.5-08 as d68.

5-09	Time Duration of Master Speed	Unit: 1
5-10	Time Duration of 1st Step Speed	Unit: 1
5-11	Time Duration of 2nd Step Speed	Unit: 1
5-12	Time Duration of 3rd Step Speed	Unit: 1
5-13	Time Duration of 4th Step Speed	Unit: 1
5-14	Time Duration of 5th Step Speed	Unit: 1
5-15	Time Duration of 6th Step Speed	Unit: 1
5-16	Time Duration of 7th Step Speed	Unit: 1
	Settings d0 to d65500	Factory Setting: d0

Pr.5-10 to Pr.5-16 correspond to operation time of each multi-step speed defined by parameters 5-00 to 5-06. The maximum value of these parameters is 65500 sec., and it's displayed as d65.5.

NOTE

If a parameter is set to "d0" (0 Sec), the corresponding step will be skipped. This is commonly used to reduce number of program steps.

Group 6: Protection Parameters

6-00	Over-Voltage Stall Prevention	
		Factory Setting: d1
Settings	d0	Disable
	d1	Enable

📖 During deceleration, the motor DC bus voltage may exceed its Maximum Allowable Value due to motor regeneration. When this function is enabled, the AC drive will stop decelerating. Maintaining a constant output frequency when it happens. The AC drive will only resume deceleration when the voltage drops below preset value.

NOTE

With a moderate inertial load, the over-voltage during deceleration won't happen, and the drive will stop in programmed time. The AC drive will automatically extend the deceleration time with high inertial loads. If deceleration time is critical for the application, then dynamic brake resistors should be used.

6-01	Over-Voltage Stall Prevention Level	Unit: 1
Settings	230V Series d350 to d410V	Factory Setting: 390
	460V Series d700 to d820V	Factory Setting: 780

📖 During deceleration, the DC bus voltage may exceed its maximum allowable value due to motor regeneration. When this function is enabled, the AC drive will stop decelerating. Maintaining a constant output frequency when it happens. The AC drive will resume deceleration when the voltage drops below preset value.

📖 With a moderate inertial load, the over-voltage during deceleration won't happen, and the drive will stop in programmed time. The AC drive will automatically extend the deceleration time with high inertial loads. If deceleration time is critical for the application, then dynamic brake resistors should be used.

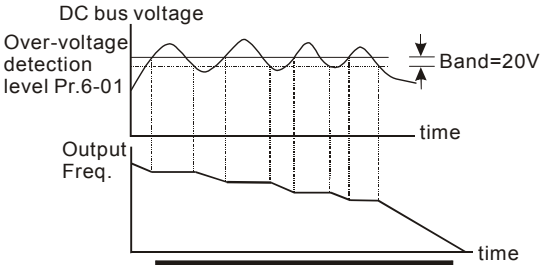

Over-voltage Stall Prevention

6-02	Over-Current Stall Prevention Level	Unit: 1
	Settings d20 to d150%	Factory Setting: d130

- A setting of 100% is equal to the Rated Output Current of the drive.
- During acceleration and steady-state operation, the AC drive output current may increase abruptly to exceed the value specified by Pr.6-02 due to rapid acceleration or excessive load on the motor. When this function is enabled, the AC drive will decrease. The AC drive will only resume acceleration when the current drops below the level specified by Pr. 6-02.

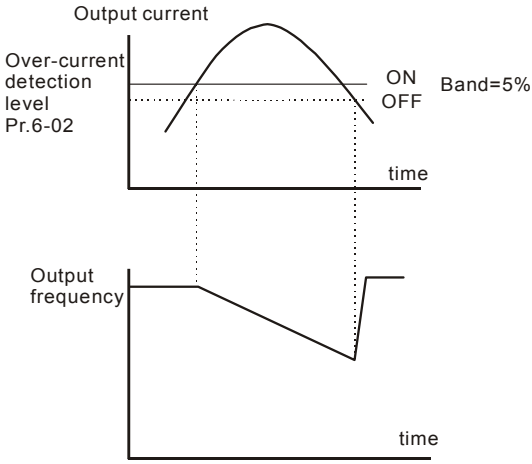

Over-current Stall Prevention Level

6-03	Over-Torque Detection Mode (OL2)	
		Factory Setting: d0
Settings	d0	Over-Torque detection disabled.
	d1	Enabled during constant speed operation. After the over-torque is detected, keep running until OL1 or OL occurs.
	d2	Enabled during constant speed operation. After the over-torque is detected, stop running.
	d3	Over-Torque detection enabled during running, and continues to run till OL1 or OL.
	d4	Enabled during running. After the over-torque is detected, stop running.

6-04	Over-Torque Detection Level	Unit: 1
Settings	d30 to d200%	Factory Setting: d150

This setting is proportional to the Rated Output Current of the drive.

6-05	Over-Torque Detection Time	Unit: 0.1
Settings	d0.1 to d10.0 sec	Factory Setting: d0.1

If a Multi-Function Output Terminal is set as Over-Torque Detection Indication and the output current exceeds the Over-Torque Detection Level (Pr.6-04, Factory Setting: 150%), the Over-Torque Detection Time (Pr.6-05, Factory setting: 0.1) and the setting of multi-function terminal is Over-Torque Detection Indication, the contact will be “close”.

6-06	Electronic Thermal Overload Relay Selection	
		Factory Setting: d2
Settings	0	Operate with a Standard Motor (self-cooled by fan)
	1	Operate with a Special Motor (forced external cooling)
	2	Operation disabled

This function is used to protect the motor from overloading or overheating.

6-07	⌿Electronic Thermal Characteristic	Unit: 1
Settings	d30 to d600Sec	Factory Setting: d60

The parameter determines the time required activating the I^2t electronic thermal protection function. The graph below shows I^2t curves for 150% output power for 1 minute.

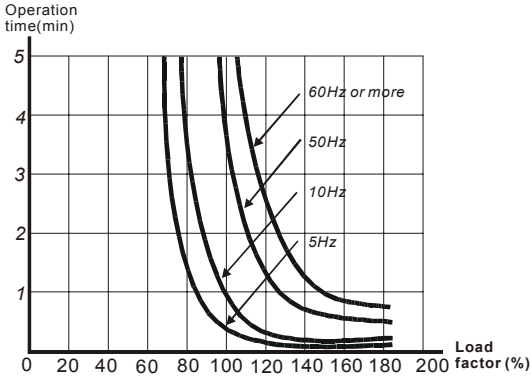

6-08	Present Fault Record
6-09	Second Most Recent Fault Record
6-10	Third Most Recent Fault Record

Factory Setting: d0

Readings	d0	No fault
	d1	Over-current (oc)
	d2	Over-voltage (ov)
	d3	Overheat (oH)
	d4	Overload (oL)
	d5	Overload1 (oL1)
	d6	External fault (EF)
	d7	Reserved
	d8	Reserved
	d9	Current exceeds 2 times rated current during accel. (ocA)
	d10	Current exceeds 2 times rated current during decel.(ocd)
	d11	Current exceeds 2 times rated current during steady state operation (ocn)
	d12	Ground fault (GF)
	d13	Reserved
	d14	Low voltage (Lv)
	d15	CPU failure 1 (cF1)
	d16	CPU failure 2 (cF2)
	d17	Base block (b.b.)
	d18	Overload (oL2)
	d19	Auto acceleration/deceleration failure (cFA)

d20	Software protection enable (codE)
d21	Reserved
d22	CPU failure (cF3.1)
d23	CPU failure (cF3.2)
d24	CPU failure (cF3.3)
d25	CPU failure (cF3.4)
d26	CPU failure (cF3.5)
d27	CPU failure (cF3.6)
d28	CPU failure (cF3.7)
d29	Hardware protection failure (HPF.1)
d30	Hardware protection failure (HPF.2)
d31	Hardware protection failure (HPF.3)
d32	Communication time-out (CE10)
d33	Reserved
d34	Software error (SErr)
d35	Reserved
d36	PID error (Pld)
d37	Reserved
d38	Phase loss (PHL)

📖 Pr.6-08 to 6-10 store records of the three most recent faults that had occurred. Use the reset key to reset the drive when the fault no longer exits.

Group 7: Motor Parameters

7-00	⁄ Motor Rated Current	Unit: 1
Settings	d30 to d120%	Factory Setting: d85

This parameter will limit the AC drive output current in order to prevent the motor from overheating.

7-01	⁄ Motor No-load Current	Unit: 1
Settings	d0 to d90%	Factory Setting: d50

The rated current of the AC drive is regarded as 100%. Motor setting of no-load current will effect the slip compensation. The setting value must be less than motor rated current setting Pr.7-00

7-02	⁄ Torque Compensation	Unit: 0.1
Settings	d0 to d10	Factory Setting: d1

This parameter may be set so that the AC drive will increase its voltage output during start-up to obtain a higher initial starting torque.

7-03	⁄ Slip Compensation	Unit: 0.01
Settings	d0.0 to d10.0	Factory Setting: d0.0

While driving an asynchronous motor, load on the AC drive will increase, causing an increase in slip. This parameter may be used to compensate the nominal slip within a range of 0 to 10. When the output current of the AC drive is greater than the motor no-load current (Pr.7-01), the AC drive will adjust its output frequency according to this parameter.

Group 8: Special Parameters

8-00	DC Brake Current Level	Unit: 1
	Settings d0 to d30%	Factory Setting: d0

This parameter determines the level of DC Brake Voltage Level output to the motor during start-up and stopping. When setting DC Brake Voltage, the Maximum Output Voltage (Pr.1-02) is regarded as 100%. It is recommended to start with a low DC Brake Voltage Level and then increase until proper holding torque has been attained.

8-01	DC Brake Time during Start-up	Unit: 0.1
	Settings d0.0 to d60.0 sec	Factory Setting: d0.0

This parameter determines the duration of time that the DC Brake Current will be applied to the motor during the AC drive start-up.

8-02	DC Brake Time during Stopping	Unit: 0.1
	Settings d0.0 to d60.0 sec	Factory Setting: d0.0

This parameter determines the duration of time that the DC brake voltage will be applied to the motor during stopping. If stopping with DC Brake is desired, then Pr.2-02 must be set to RAMP stop (d0).

8-03	Start-Point for DC Brake	Unit: 0.1
	Settings d0.0 to d400Hz	Factory Setting: d0.0

This parameter determines the frequency when DC Brake will begin during deceleration.

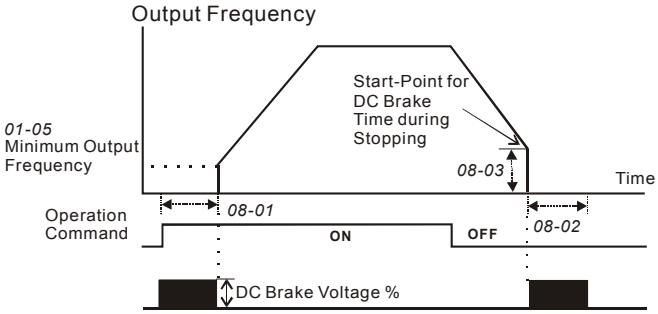

- DC Brake during Start-up is used for loads that may move before AC drive starts, such as fans and pumps. These loads may also be moving in the wrong direction. Under such circumstances, DC Brake can be executed to hold the load in position before applying a forward motion.
- DC Brake during stopping is used to decrease stopping time and also to hold a stopped load in position. For high inertial loads, a dynamic brake resistor may be needed for quick decelerations.

8-04	Momentary Power Loss Operation Selection		
			Factory Setting: d0
Settings	d0	Operation stops after momentary power loss	
	d1	Operation continues after momentary power loss, speed search starts with the Master Frequency reference value	
	d2	Operation continues after momentary power loss, speed search starts with the minimum frequency	

8-05	Maximum Allowable Power Loss Time	Unit: 0.1
Settings	d0.3 to d5.0Sec	Factory Setting: d2.0

- During a power loss, if the power loss time is less than the time defined by this parameter, the AC drive will resume operation. If the Maximum Allowable Power Loss Time is exceeded, the AC drive output is then turned off.

8-06	Base Block Speed Search	Unit: 0.1
Settings	d0.3 to d5.0Sec	Factory Setting: d0.5

- When a momentary power loss is detected, the AC drive turns off for a specified time interval determined by Pr.8-06 before resuming operation. This time interval is called Base-Block. This parameter should be set to a value where the residual output voltage is nearly zero, before the drive resumes operation.
- This parameter also determines the searching time when performing external Base-Block and fault reset.

8-07	Current Limit for Speed Search	Unit: 1
Settings	d30 to d200%	Factory Setting: d150

Following a power failure, the AC drive will start its speed search operation, only if the output current is greater than the value determined by Pr.8-07. When the output current is less than that of Pr.8-07, the AC drive output frequency is at a "speed synchronization point". The drive will start to accelerate or decelerate back to the operating frequency at which it was running prior to the power failure.

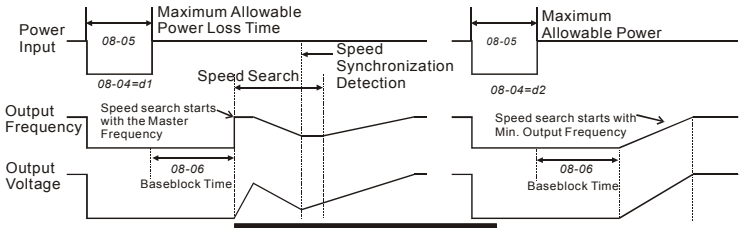

Momentary Power Loss Operation

8-08	Skip Frequency 1 Upper Limit	Unit: 0.1
8-09	Skip Frequency 1 Lower Limit	Unit: 0.1
8-10	Skip Frequency 2 Upper Limit	Unit: 0.1
8-11	Skip Frequency 2 Lower Limit	Unit: 0.1
8-12	Skip Frequency 3 Upper Limit	Unit: 0.1
8-13	Skip Frequency 3 Lower Limit	Unit: 0.1
	Settings d0.0 to d400Hz	Factory Setting: d0.0

These parameters determine Skip frequency. It will cause the AC drive to skip operation at these frequency ranges with continuous frequency output.

Pr.8-9, Pr.8-11, Pr.8-13 are for Lower Bound setting, and the settings should follow as Pr.8-9 ≧Pr.8-11≧Pr.8-13.

8-14	Auto Restart After Fault	Unit: 1
	Settings d0 to d10	Factory Setting: d0

After fault occurs (allowable faults: over-current OC, over-voltage OV), the AC drive can be reset/restarted automatically up to 10 times. Setting this parameter to 0 will disable the reset/restart operation after any fault has occurred. When enabled, the AC drive will restart with speed search, which starts at the Master Frequency.

8-15	Automatic Voltage Regulation (AVR)	
		Factory Setting: d0
Settings	d0	AVR function enabled
	d1	AVR function disabled
	d2	AVR function disabled when deceleration

- AVR function automatically regulates the AC drive output voltage to the Maximum Output Voltage (Pr.1-02). For instance, if Pr.1-02 is set at 200 VAC and the input voltage is at 200V to 264VAC, then the Maximum Output Voltage will automatically be reduced to a maximum of 200 VAC.
- Without AVR function, the Maximum Output Voltage may vary between 180V to 264VAC, due to the input voltage varying between 180V to 264 VAC.
- Selecting program value d2 enables the AVR function and also disables the AVR function during deceleration. This offers a quicker deceleration.

8-16	Software Brake Level	Unit: 1
Settings	230V series: d350 to d450V	Factory Setting: d380
	460V series: d700to d900V	Factory Setting: d760

- During deceleration, the DC-bus voltage will increase due to motor regeneration. When DC bus voltage level exceeds the Software Brake Level, the DC brake output pins (B1, B2) will be activated.

8-17	Lower Bound of DC Brake Start-up Frequency	Unit: 0.1
Settings	d0.0 to d400 Hz	Factory Setting: d0.0

- The setting frequency is lower than Pr.8-17, the DC Brake will not be activated when stops.

Group 9: Communication Parameters

9-00	✓Communication Address	
Settings	d1 to d254	Factory Setting: d1

If the AC drive is controlled by RS-485 serial communication, the communication address must be set via this parameter.

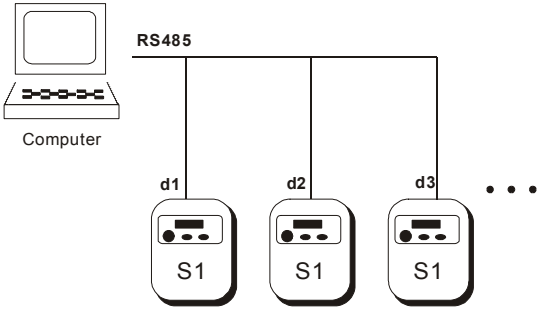

9-01	✓Transmission Speed	
		Factory Setting: d1
Settings	d0	Baud rate 4800 bps (bits / second)
	d1	Baud rate 9600 bps
	d2	Baud rate 19200 bps
	d3	Baud rate 38400 bps

Users can set parameters and control the operation of the AC drive via the RS-485 serial interface of a personal computer. This parameter is used to set the transmission speed between the computer and AC drive.

9-02	✓Transmission Fault Treatment	
		Factory Setting: d0
Settings	d0	Warn and keep operating
	d1	Warn and RAMP to stop
	d2	Warn and COAST to stop
	d3	No warning and keep operating

9-03 ✓Time-out Detection

Factory Setting: d0

Settings	d0	Disable
	d1~d20	1~20 sec

If this function is enabled, the timer will start counting once the first valid Modbus communication signal is received after power-up or reset. The timer will reset to 0 after each valid Modbus communication message is received. If the watchdog timer reaches the value set in Pr. 9-03, the drive will stop its output and display the message "CE10" on the digital keypad. This fault can reset by an external terminal, keypad or a Modbus communication reset command.

9-04 ✓Communication Protocol

Factory Setting: d0

Settings	d0	Modbus ASCII mode, protocol <7,N,2>
	d1	Modbus ASCII mode, protocol <7,E,1>
	d2	Modbus ASCII mode, protocol <7,O,1>
	d3	Modbus ASCII mode, protocol <8,N,2>
	d4	Modbus ASCII mode, protocol <8,E,1>
	d5	Modbus ASCII mode, protocol <8,O,1>
	d6	Modbus RTU mode, protocol <8,N,2>
	d7	Modbus RTU mode, protocol <8,E,1>
	d8	Modbus RTU mode, protocol <8,O,1>

1. Computer Control

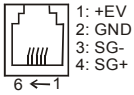

★ There is a built-in RS-485 serial interface, marked (RJ-11 Jack) on the control terminal block, for VFD-S Series. The pins are defined above. Each VFD-S AC drive has a pre-assigned communication address specified by Pr. 9-00. The computer then controls each AC drive according to its communication address.

★ VFD-S can be setup to communicate on Modbus networks using one of the following modes: ASCII (American Standard Code for Information Interchange) or RTU (Remote Terminal Unit). Users can select the desired mode along with the serial port communication protocol in Pr. 9-04.

★Code Description:

ASCII mode:

Each 8-bit data is the combination of two ASCII characters. For example, a 1-byte data: 64 Hex, shown as ‘64’ in ASCII, consists of ‘6’ (36Hex) and ‘4’ (34Hex).

Character	‘0’	‘1’	‘2’	‘3’	‘4’	‘5’	‘6’	‘7’
ASCII code	30H	31H	32H	33H	34H	35H	36H	37H

Character	‘8’	‘9’	‘A’	‘B’	‘C’	‘D’	‘E’	‘F’
ASCII code	38H	39H	41H	42H	43H	44H	45H	46H

RTU mode:

Each 8-bit data is the combination of two 4-bit hexadecimal characters. For example, 64 Hex.

2. Data Format

2.1 10-bit character frame (For 7-bit character):

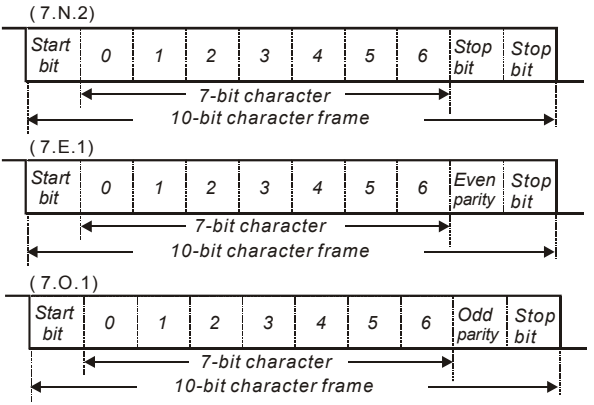

2.2 11-bit character frame (For 8-bit character):

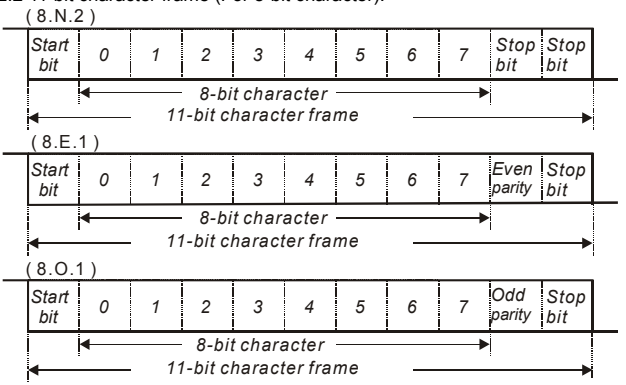

3. Communication Protocol

3.1 Communication Data Frame:

ASCII mode:

STX	Start character ':' (3AH)
ADR 1 ADR 0	Communication address: 8-bit address consists of 2 ASCII codes
CMD1 CMD0	Command code: 8-bit command consists of 2 ASCII codes
DATA (n-1) ……. DATA 0	Contents of data: n x 8-bit data consist of 2n ASCII codes. n <= 25，maximum of 50 ASCII codes
LRC CHK 1 LRC CHK 0	LRC check sum: 8-bit check sum consists of 2 ASCII codes
END1 END0	End characters: END1= CR (0DH), END0= LF (0AH)

RTU mode:

START	A silent interval of more than 10 ms
ADR	Communication address: 8-bit address
CMD	Command code: 8-bit command
DATA (n-1) ……. DATA 0	Contents of data: n x 8-bit data, n<= 25
CRC CHK Low CRC CHK High	CRC check sum: 16-bit check sum consists of 2 8-bit characters
END	A silent interval of more than 10 ms

3.2 ADR (Communication Address)

Valid communication addresses are in the range of 0 to 254. A communication address equal to 0, means broadcast to all AC drives (AMD). In this case, the AMD will not reply any message to the master device.

00H: broadcast to all AC drives

01H: AC drive of address 01

0FH: AC drive of address 15

10H: AC drive of address 16

:

FEH: AC drive of address 254

For example, communication to AMD with address 16 decimal (10H):

ASCII mode: Address=‘1’,’0’ => ‘1’=31H, ‘0’=30H

RTU mode: Address=10H

3.3 CMD (Command code) and DATA (data characters)

The format of data characters depends on the command code. The available command codes are described as followed: Command code: 03H, read N words. The maximum value of N is 12. For example, reading continuous 2 words from starting address 2102H of AMD with address 01H.

ASCII mode:

Command message:

STX	‘:’
ADR 1	‘0’
ADR 0	‘1’
CMD 1	‘0’
CMD 0	‘3’
Starting data address	‘2’
	‘1’
	‘0’
	‘2’
Number of data (count by word)	‘0’
	‘0’
	‘0’
	‘2’
LRC CHK 1	‘D’
LRC CHK 0	‘7’
END 1	CR
END 0	LF

Response message:

STX	‘:’
ADR 1	‘0’
ADR 0	‘1’
CMD 1	‘0’
CMD 0	‘3’
Number of data (Count by byte)	‘0’
	‘4’
Content of starting address 2102H	‘1’
	‘7’
	‘7’
	‘0’
Content of address 2103H	‘0’
	‘0’
	‘0’
	‘0’
LRC CHK 1	‘7’
LRC CHK 0	‘1’
END 1	CR
END 0	LF

RTU mode:

Command message:

ADR	01H
CMD	03H
Starting data address	21H
	02H
Number of data (count by word)	00H
	02H
CRC CHK Low	6FH
CRC CHK High	F7H

Response message:

ADR	01H
CMD	03H
Number of data (count by byte)	04H
Content of address 2102H	17H
	70H
Content of address 2103H	00H
	00H
CRC CHK Low	FEH
CRC CHK High	5CH

(2) 06H: single write, write single data to register.

Example: writing data 6000(1770H) to register 0100H. AMD address is 01H.

ASCII mode:

Command message:

STX	':'
ADR 1	'0'
ADR 0	'1'
CMD 1	'0'
CMD 0	'6'
Data address	'0'
	'1'
	'0'
	'0'
Data content	'1'
	'7'
	'7'
	'0'
LRC CHK 1	'7'
LRC CHK 0	'1'
END 1	CR
END 0	LF

Response message:

STX	':'
ADR 1	'0'
ADR 0	'1'
CMD 1	'0'
CMD 0	'6'
Data address	'0'
	'1'
	'0'
	'0'
Data content	'1'
	'7'
	'7'
	'0'
LRC CHK 1	'7'
LRC CHK 0	'1'
END 1	CR
END 0	LF

RTU mode:

Command message:

ADR	01H
CMD	06H
Data address	01H
	00H
Data content	17H
	70H
CRC CHK Low	86H
CRC CHK High	22H

Response message:

ADR	01H
CMD	06H
Data address	01H
	00H
Data content	17H
	70H
CRC CHK Low	86H
CRC CHK High	22H

(3) Command code: 10H, write n word, n<=12

For example, writing 6000(1770H) to Pr 5-00 (address 0500H) and1000(03E8H) to Pr 5-01 (address 0501H) with slave address 01H.

ASCII Mode:

Command message:

STX	':'
ADR 1	'0'
ADR 0	'1'
CMD1	'1'
CMD0	'0'
Starting Data address	'0'
	'5'
	'0'
	'0'
Number of data (count by word)	'0'
	'0'
	'0'
	'2'
Number of data (count by byte)	'0'
	'4'
Data content of address 0500H	'1'
	'7'
	'7'
	'0'
Data content of address 0501H	'0'
	'3'
	'E'
	'8'
LRC CHK 1	'7
LRC CHK 0	'2
END1	CR
END0	LF

Response message:

STX	':'
ADR 1	'0'
ADR 0	'1'
CMD1	'1'
CMD0	'0'
Starting Data address	'0'
	'5'
	'0'
	'0'
Number of data (count by word)	'0'
	'0'
	'0'
	'2'
LRC CHK 1	'E'
LRC CHK 0	'8'
END1	CR
END0	LF

RTU mode:

Command message:

ADR	01H
CMD	10H
Starting Data address	05H
	00H
Number of data (count by word)	00H
	02H
Number of data (count by Byte)	04H
Data content of address 0500H	17H
	70H
Data content of address 0501H	03H
	E8H
CRC CHK Low	C8H
CRC CHK High	2EH

Response message:

ADR	01H
CMD	10H
Starting Data address	05H
	00H
Number of data (count by word)	00H
	02H
CRC CHK Low	41H
CRC CHK High	04H

3.4 Check sum

ASCII mode:

LRC (Longitudinal Redundancy Check) is calculated by summing up, module 256, the values of the bytes from ADR1 to last data character then calculating the hexadecimal representation of the 2's-complement negation of the sum.

For example, reading 1 word from address 0401H of the AC drive with address 01H

STX	':'
ADR 1	'0'
ADR 0	'1'
CMD1	'0'
CMD0	'3'
Starting data address	'0'
	'4'
	'0'
	'1'
Number of data	'0'
	'0'
	'0'
	'1'
LRC CHK 1	'F'
LRC CHK 0	'6'
END1	CR
END0	LF

01H+03H+04H+01H+00H+01H=0AH, the 2's-complement negation of 0AH is **F6**H.

RTU mode:

ADR	01H
CMD	03H
Starting address	21H
	02H
Number of data (count by word)	00H
	02H
CRC CHK Low	6FH
CRC CHK High	F7H

CRC (Cyclical Redundancy Check) is calculated by the following steps:

Step 1: Load a 16-bit register (called CRC register) with FFFFH.

Step 2: Exclusive OR the first 8-bit byte of the command message with the low order byte of the 16-bit CRC register, putting the result in the CRC register.

Step 3: Examine the LSB of CRC register.

Step 4: If the LSB of CRC register is 0, shift the CRC register one bit to the right with MSB zero filling, then repeat step 3. If the LSB of CRC register is 1, shift the CRC register one bit to the right with MSB zero filling, Exclusive OR the CRC register with the polynomial value A001H, then repeat step 3.

Step 5: Repeat step 3 and 4 until eight shifts have been performed. When this is done, a complete 8-bit byte will have been processed.

Step 6: Repeat step 2 to 5 for the next 8-bit byte of the command message. Continue doing this until all bytes have been processed. The final contents of the CRC register are the CRC value. When transmitting the CRC value in the message, the upper and lower bytes of the CRC value must be swapped, i.e. the lower order byte will be transmitted first.

The following is an example of CRC generation using C language. The function takes two arguments:

Unsigned char* data ← a pointer to the message buffer

Unsigned char length ← the quantity of bytes in the message buffer

The function returns the CRC value as a type of unsigned integer.

```
Unsigned int crc_chk(unsigned char* data, unsigned char length){
  int j;
  unsigned int reg_crc=0xFFFF;
  while(length--){
    reg_crc ^= *data++;
    for(j=0;j<8;j++){
      if(reg_crc & 0x01){  /* LSB(b0)=1 */
        reg_crc=(reg_crc>>1) ^ 0xA001;
      }else{
        reg_crc=reg_crc >>1;
      }
    }
  }
 return reg_crc;
}
```

3.5 Address list

The contents of available addresses are shown as below:

Content	Address	Functions
AC drive Parameters	ggnnH	gg means parameter group, nn means parameter number, for example, the address of Pr 4-01 is 0401H. Refer to chapter 5 for the function of each parameter. When reading parameter by command code 03H, only one parameter can be read at one time.

Content	Address	Functions	
Command	2000H	Bit 0-1	00: No function 01: Stop 10: Run 11: Jog + Run
		Bit 2-3	Not used
		Bit 4-5	00: No function 01: FWD 10: REV 11: Change direction
		Bit 6-15	Not used
	2001H	Freq. command	
	2002H	Bit 0	1: EF (external fault) on
		Bit 1	1: Reset
		Bit 2-15	Not used
Status monitor Read only	2100H	Error code: 0: No errors occurred 1: Over-current (oc) 2: Over-voltage (ov) 3: Overheat (oH) 5: Overload1 (oL1) 6: External fault (EF) 7: Not used 8: Not used 9: Current exceeds 2 times rated current during acceleration (ocA) 10: Current exceeds 2 times rated current during deceleration (ocd) 11: Current exceeds 2 times rated current during steady state operation (ocn) 12: Ground Fault (GF) 13: Reserved 14: Low voltage (Lv) 15: CPU failure 1 (cF1) 16: CPU failure 2 (cF2) 17: Base block 18: Overload (oL2) 19: Auto acceleration/deceleration failure (cFA) 20: Software protection enable (codE) 21: Reserved 22: CPU failure (cF3.1) 23: CPU failure (cF3.2) 24: CPU failure (cF3.3) 25: CPU failure (cF3.4) 26: CPU failure (cF3.5) 27: CPU failure (cF3.6) 28: CPU failure (cF3.7) 29: Hardware protection failure (HPF.1) 30: Hardware protection failure (HPF.2) 31: Hardware protection failure (HPF.3) 32: CE 10 33: Reserved 34: Software error (SErr)	

Content	Address	Functions	
		35: Reserved 36: PID error (Pld) 37: Reserved 38: Phase loss (PHL)	
	2101H	Status of AC Drive	
		Bit 0-1	00: RUN LED light off, STOP LED light up
			01: RUN LED blink, STOP LED light up
			10: RUN LED light up, STOP LED blink
			11: RUN LED light up, STOP LED light off
		Bit 2	01: Jog active
		Bit 3-4	00: REV LED light off, FWD LED light up
			01: REV LED blink, FWD LED light up
			10: REV LED light up, FWD LED blink
			11: REV LED light up, FRD LED light off
		Bit 5-7	Not used
		Bit 8	1: Main freq. Controlled by communication
		Bit 9	1: Main freq. Controlled by external terminal
		Bit 10	1: Operation command controlled by communication
		Bit 11	1: Parameters have been locked
		Bit 12-15	Not Used
	2102H	Frequency command F (XXX.XX)	
	2103H	Output Frequency H (XXX.XX)	
	2104H	Output Current A (XXX.XX)	
	2105H	DC-BUS Voltage U (XXX.XX)	
	2106H	Output Voltage E (XXX.XX)	
	2107H	Step number of Multi-Step Speed Operation	
	2108H	Step number of PLC operation	
	2109H	Time of PLC Operation	
	210AH	Counter Value	

3.6 Exception response:

The AC motor drive is expected to return a normal response after receiving command messages from the master device. The following depicts the conditions when no normal response is replied to the master device.

The AC motor drive does not receive the messages due to a communication error; thus, the AC motor drive has no response. The master device will eventually process a timeout condition.

The AC motor drive receives the messages without a communication error, but cannot handle them. An exception response will be returned to the master device and an error message “CExx” will be displayed on the keypad of AC motor drive. The xx of “CExx” is a decimal code equal to the exception code that is described below.

In the exception response, the most significant bit of the original command code is set to 1, and an exception code which explains the condition that caused the exception is returned.

Example of an exception response of command code 06H and exception code 02H:

ASCII mode:

STX	':'
ADR 1	'0'
ADR 0	'1'
CMD1	'8'
CMD0	'6'
Exception code	'0'
	'2'
LRC CHK 1	'7'
LRC CHK 0	'7'
END1	CR
END0	LF

RTU mode:

ADR	01H
CMD	86H
Exception code	02H
CRC CHK Low	C3H
CRC CHK High	A1H

The explanation of exception codes:

Exception code	Meaning
1	**Illegal command code:** The command code received in the command message is not available for the AC drive.
2	**Illegal data address:** The data address received in the command message is not available for the AC drive.
3	**Illegal data value:** The data value received in the command message is not available for the AC drive.
4	**Slave device failure:** The AC drive is unable to perform the requested action.

The AC drive receives the messages, but detects a communication error, thus, no response is returned, but there will be error message "CExx" displayed on the keypad of AC drive. The master device will eventually process a timeout condition. The xx of "CExx" is a decimal code, the meaning of the error message is below:

Error message	Meaning
5	Reserved
6	AC drive busy: The time interval between commands is too short. Please keep an interval of 10ms at least after the return of a command. If no command returned, please keep a 10ms interval at least for the same reason.
7	Reserved
8	Reserved
9	Check Sum Error: Check if the Check Sum is correct.
10	Watchdog Timer: The timer will reset to 0 after each valid Modbus communication message is received.
11	Frame Error: Check if the Baud rate complies with the data format.
12	The command message is too short.
13	Command message length is out of range.
14	The command messages include the data that does not belong to '0' to '9', 'A' to 'F except starting and end character (only for Modbus ASCII mode).

3.7 Communication program of PC:

The following is a simple example of how to write a communication program for Modbus ASCII mode on a PC in C language.

```
#include<stdio.h>
#include<dos.h>
#include<conio.h>
#include<process.h>
#define PORT 0x03F8  /* the address of COM1 */
/* the address offset value relative to COM1 */
#define THR  0x0000
#define RDR  0x0000
#define BRDL  0x0000
#define IER  0x0001
#define BRDH 0x0001
#define LCR  0x0003
#define MCR  0x0004
#define LSR  0x0005
#define MSR  0x0006
unsigned char rdat[60];
/* read 2 data from address 2102H of AC drive with address 1 */
unsigned char tdat[60]={':','0','1','0','3','2','1','0','2', '0','0','0','2','D','7','\r','\n'};
void main(){int i;
outportb(PORT+MCR,0x08);            /* interrupt enable */
outportb(PORT+IER,0x01);            /* interrupt as data in */
outportb(PORT+LCR,(inportb(PORT+LCR) | 0x80));
/* the BRDL/BRDH can be access as LCR.b7==1 */
outportb(PORT+BRDL,12);             /* set baudrate=9600, 12=115200/9600*/
outportb(PORT+BRDH,0x00);
outportb(PORT+LCR,0x06);            /* set protocol, <7,N,2>=06H, <7,E,1>=1AH,  <7,O,1>=0AH,
            <8,N,2>=07H, <8,E,1>=1BH, <8,O,1>=0BH   */
for(i=0;i<=16;i++){
while(!(inportb(PORT+LSR) & 0x20)); /* wait until THR empty */
outportb(PORT+THR,tdat[i]);       /* send data to THR */    }
i=0;
while(!kbhit()){
if(inportb(PORT+LSR) & 0x01){ /* b0==1, read data ready */
rdat[i++]=inportb(PORT+RDR); /* read data form RDR */
}    }     }
```

Group A: PID Control

A-00	Input Terminal for PID Feedback	
		Factory Setting: d0
Settings	d0	Disable
	d1	Negative PID feedback from external terminal (AVI) 0 to +10V
	d2	Negative PID feedback from external terminal (ACI) 4 to 20mA
	d3	Positive PID feedback from external terminal (AVI) 0 to +10V
	d4	Positive PID feedback from external terminal (ACI) 4 to 20mA

📖 Select an input terminal to serve as the PID feedback location. Please verify the feedback location is different from the Frequency Set Point location and J1 for selecting ACI or AVI must be in the correct position. (Refer to Pr. 2-00 for detail)

📖 Negative feedback = Positive target value – detection value.

Positive feedback = Negative target value + detection value.

A-01	Gain over PID Detection value	
Settings	d0 to d999 (d100 means gain value is 1)	Factory Setting: d100

📖 To adjust feedback detective gain value. It is used to adjust target value error.

A-02	Proportional Gain (P)	Unit: 1
Settings	d0 to d999% (d0: disable) (d100 means gain value is 1)	Factory Setting: d100

📖 This parameter is used to determinate error gain. If I = 0 and D = 0, doing proportional gain operation.

A-03	Integral Time (I)	Unit: 1
Settings	d0 to d999	Factory Setting: d100
	d0 Disable	

📖 When this parameter is defined to gain is 1 and error value is fixed, integral value is equal to error value as the setting of integral time is attained.

A-04	Derivative Control (D)	Unit: 1
Settings	d0 to d100	Factory Setting: d0
	d0 Disable	

📖 When this parameter is set to gain =1, PID output is Derivative time. At this time, error value – error value of the preceding item= additional respond speed and it is easy to have over compensation situation.

A-05	Upper Bound for Integral Control	Unit: 1
Settings	d0 to d100%	Factory Setting: d100

📖 This parameter determines the Upper Bound for Integral Control while operating in the PID feedback loop. (Limit = 1-00×A-05 %). During a fast Integration response, it is possible for the frequency to spike beyond a reasonable point. This parameter will limit this frequency spike.

A-06	Primary Delay Filter Time	Unit: 2 msec
Settings	d0 to d999	Factory Setting: d0

📖 Primary Delay Filter Time will slow down oscillation of the system.

📖 A setting of d0 disables this function.

A-07	PID Output Frequency Limit	Unit: 1
Settings	d0 to d110%	Factory Setting: d100

📖 This parameter determines the limit of the PID output frequency. If this parameter is set to 110%, then the maximum output frequency while in the PID operation will be (110% x Pr.01-00) 66Hz.

A-08	Feedback Signal Detection Time	Unit: 0.1
Settings	d0.0 to d650 seconds	Factory Setting: d0.0

📖 This parameter defines the detection time for the loss of a feedback analog signal. The drive will follow the operating procedure programmed in Pr.A-09 if the feedback signal is lost for more than the time set in Pr. A-08.

📖 A setting of 0.0 disables this function.

A-09	Treatment of the Erroneous Feedback Signals	
		Factory Setting: d0
Settings	d0	Warning and RAMP to stop
	d1	Warning and COAST to stop

This parameter selects the operation of the drive upon a loss of PID feedback signal.

A-10	Sleep Frequency	Unit: 0.1
Settings	d0.0 to d400Hz	Factory Setting: d0.0

A-11	Wakeup Frequency	Unit: 0.1
Settings	d0.0 to d400Hz	Factory Setting: d0.0

A-12	Sleep Period	Unit: 0.1
Settings	d0.0 to d650 seconds	Factory Setting: d0.0

These parameters determine sleep functions of the AC drive. If the command frequency falls below the sleep frequency, for the specified time in Pr. A-12, then the drive will shut off the output and wait until the command frequency rises above Pr. A-11. Please see the below diagram.

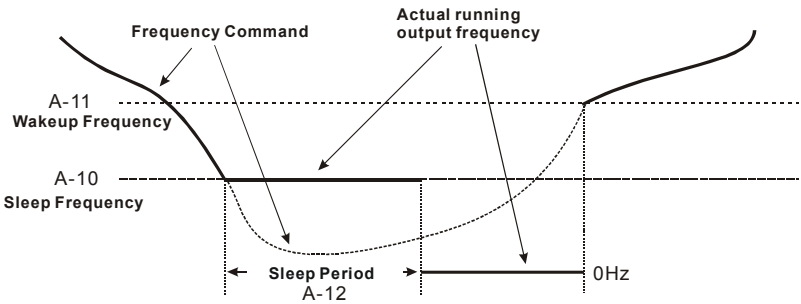

Sleep Function

A-13	PID User Defined	Unit: 0.1
Settings	d0.0 to d400	Factory Setting: d0.0

When parameter A-13 is set to 0, what F and H display is the actual value of setting frequency and output frequency. When this parameter is not set to 0, the display value of F and H = actual value ×A-13/1-00. To set frequency with panel, communication, VR, AVI or ACI need to set according to the display value. For example, when 1-00=60.0Hz, if A-13 is set to 30.0 Hz, it means when the actual value of frequency is 30.00 Hz, the display value will be 15.0 Hz . If you want to let drive run at 10.0Hz, the frequency command must be 5.0 Hz. But

the setting frequency of parameters, such as Max. operation frequency, 1st speed and etc., they are still needed to set with actual value.

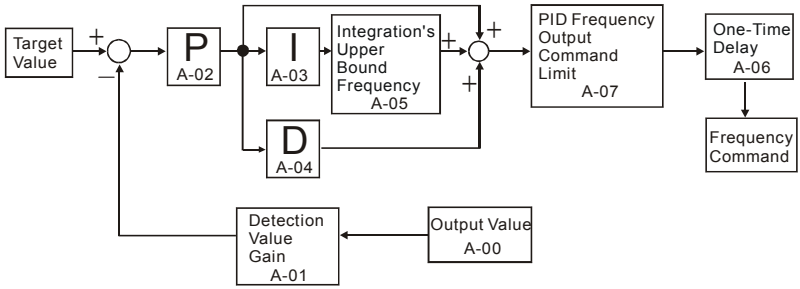

If the input range of sensor is 0~SI_max, output range is SO_min~SO_max and then $\frac{\text{Input}}{\text{Per output}}$ is $\frac{\text{SI_max}}{\text{SO_max-SO_min}}$, set drive input to sensor output

Set input range of drive is D_range= 10V(0~10V) or 16mA (4~20mA) that correspond to 0~1-00Hz and then $\frac{\text{Output}}{\text{Per input}}$ will be $\frac{\text{1-00}}{\text{D_range}}$

According to the display value of F and H = actual value ×A-13/1-00, and then $\frac{\text{Display value of F, H}}{\text{Actual value}}$ =A-13/1-00. If you want the result to be display value = sensor output and actual value = drive output, and then

$$\frac{\text{A-13}}{\text{1-00}} = \frac{\frac{\text{SI_max}}{\text{SO_max-SO_min}} \times \frac{\text{A-01}}{100}}{\frac{\text{1-00}}{\text{D_range}}} \Rightarrow \underline{\text{A-13} = \frac{\text{SI_max}}{\text{SO_max-SO_min}} \times \frac{\text{A-01}}{100} \times \text{D_range}}$$

Example:

Sensor: 0~6 psi input corresponds to 0~5V output drive AVI: 0~10V input corresponds to 0~60Hz, A-01=100

$$\text{A-13} = \frac{6}{5-0} \times \frac{100}{100} \times 10 = 12$$

Chapter 6 Fault Code Information

The AC motor drive has a comprehensive fault diagnostic system that includes several different alarms and fault messages. Once a fault is detected, the corresponding protective functions will be activated. The following faults are displayed as shown on the AC motor drive digital keypad display. The three most recent faults can be read from the digital keypad or communication.

NOTE

Wait 5 seconds after a fault has been cleared before performing reset via keypad of input terminal.

6.1 Common Problems and Solutions

Fault Name	Fault Descriptions	Corrective Actions
oc	**Over current** Abnormal increase in current.	1. Check if motor power corresponds with the AC motor drive output power. 2. Check the wiring connections to U/T1, V/T2, W/T3 for possible short circuits. 3. Check the wiring connections between the AC motor drive and motor for possible short circuits, also to ground. 4. Check for loose contacts between AC motor drive and motor. 5. Increase the Acceleration Time. 6. Check for possible excessive loading conditions at the motor. 7. If there are still any abnormal conditions when operating the AC motor drive after a short-circuit is removed and the other points above are checked, it should be sent back to manufacturer.
ou	**Over voltage** The DC bus voltage has exceeded its maximum allowable value.	1. Check if the input voltage falls within the rated AC motor drive input voltage range. 2. Check for possible voltage transients. 3. DC-bus over-voltage may also be caused by motor regeneration. Either increase the Decel. Time or add an optional brake resistor. 4. Check whether the required brake power is within the specified limits.

Fault Name	Fault Descriptions	Corrective Actions
oH	**Overheating** Heat sink temperature too high	1. Ensure that the ambient temperature falls within the specified temperature range. 2. Make sure that the ventilation holes are not obstructed. 3. Remove any foreign objects from the heatsinks and check for possible dirty heat sink fins. 4. Check the fan and clean it. 5. Provide enough spacing for adequate ventilation. (See chapter 2)
Lu	**Low voltage** The AC motor drive detects that the DC bus voltage has fallen below its minimum value.	1. Check whether the input voltage falls within the AC motor drive rated input voltage range. 2. Check for abnormal load in motor. 3. Check for correct wiring of input power to R-S-T (for 3-phase models) without phase loss.
oL	**Overload** The AC motor drive detects excessive drive output current. **NOTE: The AC motor drive can withstand up to 150% of the rated current for a maximum of 60 seconds.**	1. Check whether the motor is overloaded. 2. Reduce torque compensation setting in Pr.7-02 3. Use the next higher power AC motor drive model.
oL1	**Overload 1** Internal electronic overload trip	1. Check for possible motor overload. 2. Check electronic thermal overload setting. 3. Use a higher power motor. 4. Reduce the current level so that the drive output current does not exceed the value set by the Motor Rated Current Pr.7-00.
oL2	**Overload 2** Motor overload.	1. Reduce the motor load. 2. Adjust the over-torque detection setting to an appropriate setting (Pr.6-03 to Pr.6-05).
HPF1	**GFF hardware error**	Return to the factory.
HPF2	**CC (current clamp)**	
HPF3	**OC hardware error**	
ocA	**Over-current during acceleration**	1. Short-circuit at motor output: Check for possible poor insulation at the output lines. 2. Torque boost too high: Decrease the torque compensation setting in Pr.7-02 3. Acceleration Time too short: Increase the Acceleration Time. 4. AC motor drive output power is too small: Replace the AC motor drive with the next higher power model.
ocd	**Over-current during deceleration**	1. Short-circuit at motor output: Check for possible poor insulation at the output line. 2. Deceleration Time too short: Increase the Deceleration Time. 3. AC motor drive output power is too small: Replace the AC motor drive with the next higher power model.

Fault Name	Fault Descriptions	Corrective Actions
ocn	**Over-current during constant speed operation**	1. Short-circuit at motor output: Check for possible poor insulation at the output line. 2. Sudden increase in motor loading: Check for possible motor stall. 3. AC motor drive output power is too small: Replace the AC motor drive with the next higher power model.
EF	**External Fault**	1. When multi-function input terminals (M1-M5) are set to external fault, the AC motor drive stops output U, V and W. 2. Give RESET command after fault has been cleared.
cF1	**Internal EEPROM can not be programmed.**	Return to the factory.
cF2	**Internal EEPROM can not be programmed.**	Return to the factory.
cF3.1	**OH error**	Return to the factory.
cF3.2	**OV error**	
cF3.3	**LV error**	
cF3.4	**Drive's internal circuitry abnormal.**	
cF3.5		
cF3.6		
cF3.7		
GF	**Ground fault**	When (one of) the output terminal(s) is grounded, short circuit current is more than 50% of AC motor drive rated current, the AC motor drive power module may be damaged. **NOTE: The short circuit protection is provided for AC motor drive protection, not for protection of the user.** 1. Check whether the IGBT power module is damaged. 2. Check for possible poor insulation at the output line.
bb	**External Base Block.** (Refer to Pr. 8-06)	1. When the external input terminal (B.B) is active, the AC motor drive output will be turned off. 2. Deactivate the external input terminal (B.B) to operate the AC motor drive again.
cFA	**Auto accel/decel failure**	1. Check if the motor is suitable for operation by AC motor drive. 2. Check if the regenerative energy is too large. 3. Load may have changed suddenly.
cE--	**Communication Error**	1. Check the RS485 connection between the AC motor drive and RS485 master for loose wires and wiring to correct pins. 2. Check if the communication protocol, address, transmission speed, etc. are properly set. 3. Use the correct checksum calculation. 4. Please refer to group 9 in the chapter 5 for detail information.

Fault Name	Fault Descriptions	Corrective Actions
CcodE	**Software protection failure**	Return to the factory.
PcodE	**Password is locked.**	Keypad will be locked. Turn the power ON after power OFF to re-enter the correct password. See Pr.0-07 and 0-08.
AnLEr	**Analog feedback error or ACI open circuit**	1. Check parameter setting (Pr.A-00) and AVI/ACI wiring 2. Check for possible fault between system response time and the feedback signal detection time (Pr.A-08).
PHL	**Phase Loss**	Check input phase wiring for loose contacts.
P Id	**PID feedback error**	1. Check PID feedback wiring. 2. Check if the parameter setting is properly set.

6.2 Reset

There are three methods to reset the AC motor drive after solving the fault:

1. Press STOP/RESET key on keypad.
2. Set external terminal to “RESET” (set one of Pr.4-04~Pr.4-08 to 06) and then set to be ON.
3. Send “RESET” command by communication.

NOTE

Make sure that RUN command or signal is OFF before executing RESET to prevent damage or personal injury due to immediate operation.

7.1 Over Current (OC)

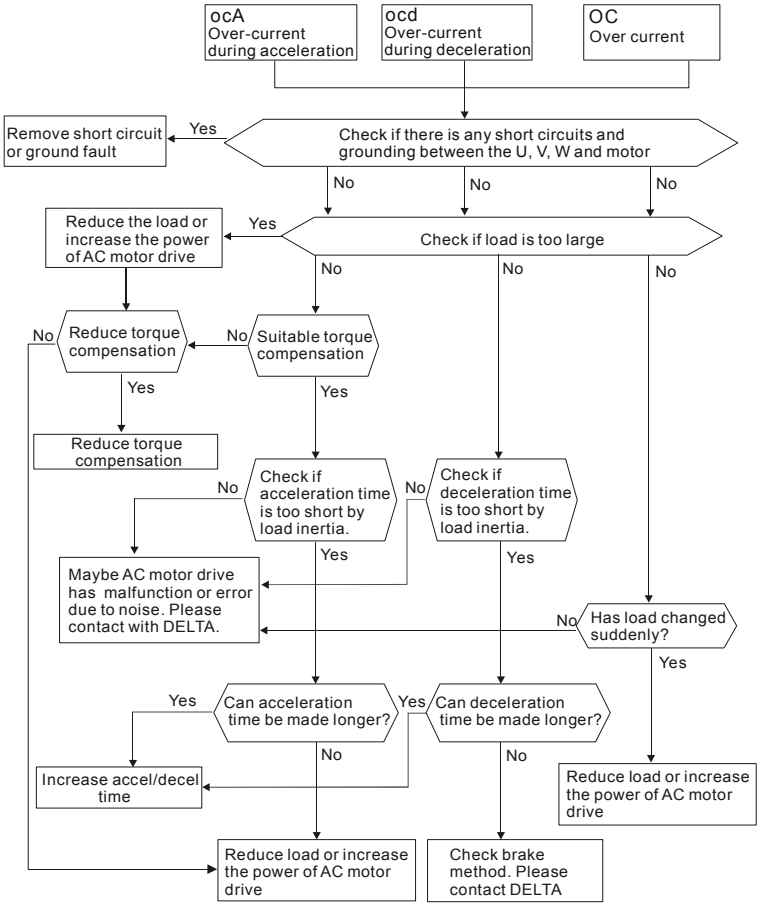

7.2 Ground Fault

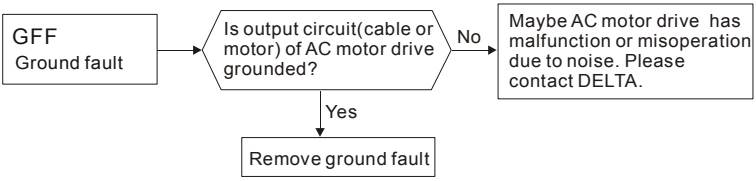

7.3 Over Voltage (OV)

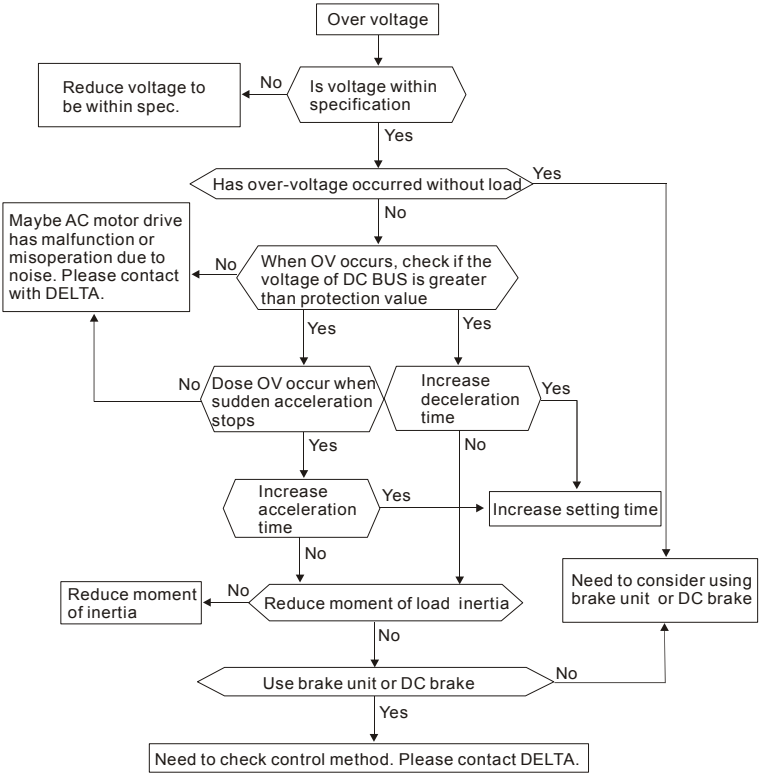

7.4 Low Voltage (Lv)

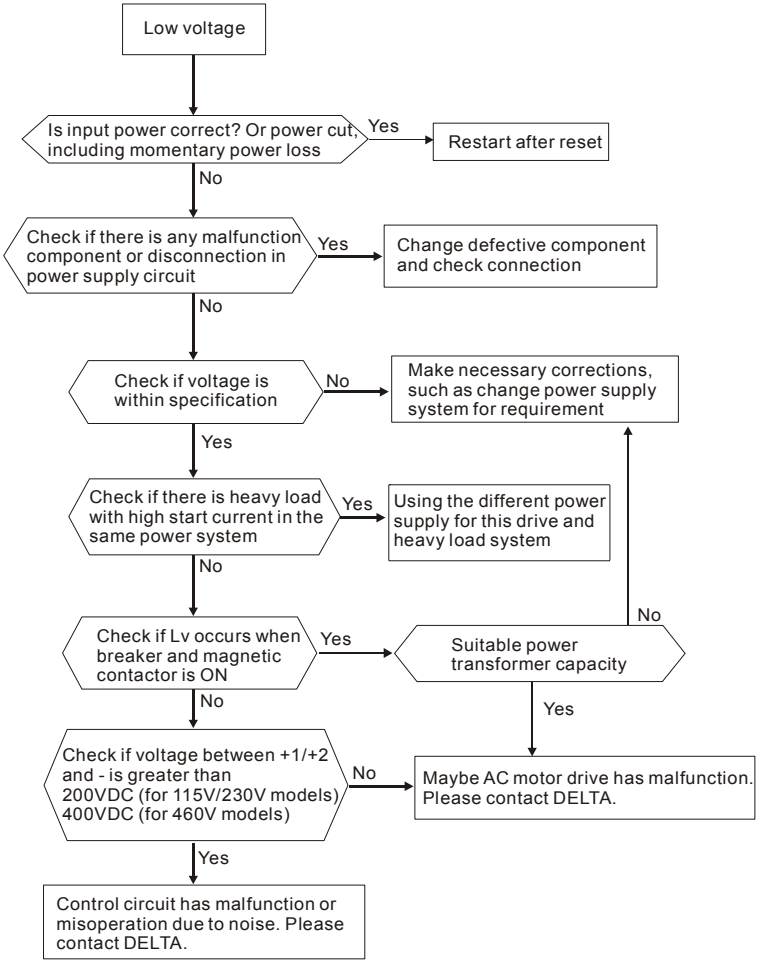

7.5 Over Heat (OH)

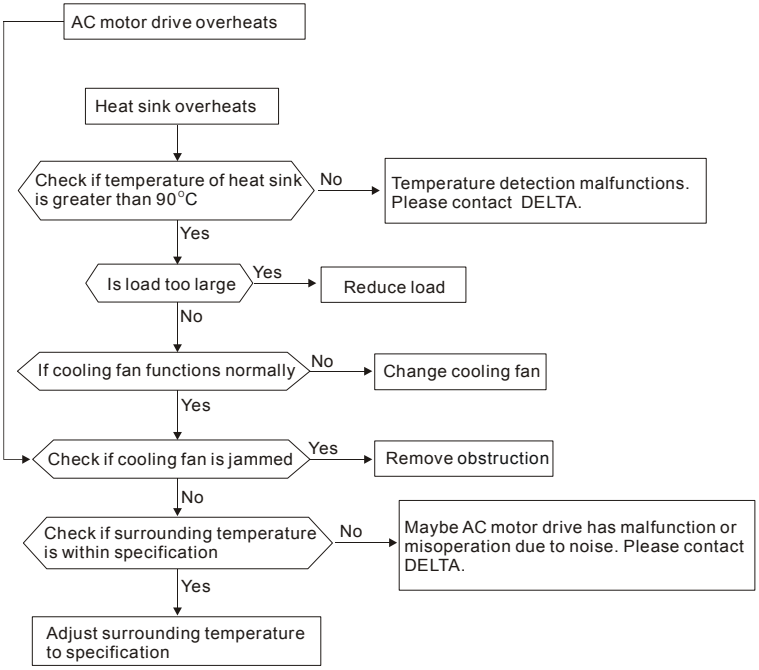

7.6 Overload

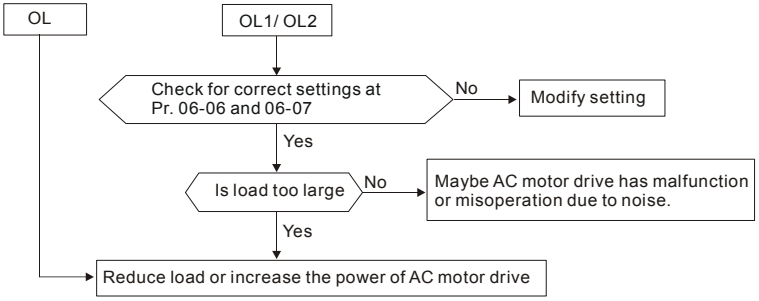

7.7 Keypad Display is Abnormal

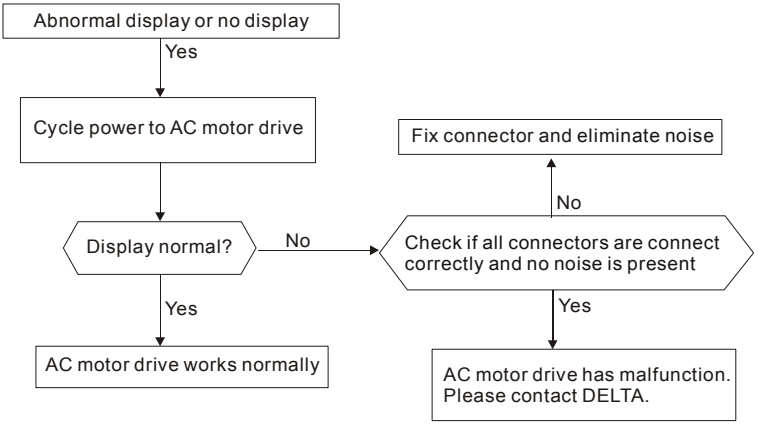

7.8 Phase Loss (PHL)

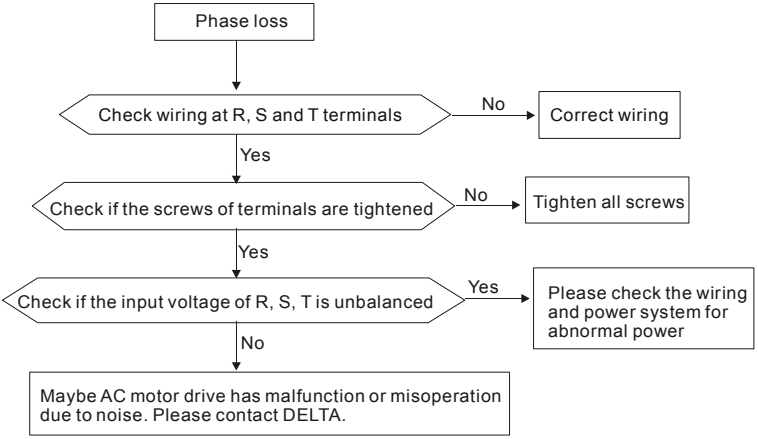

7.9 Motor cannot Run

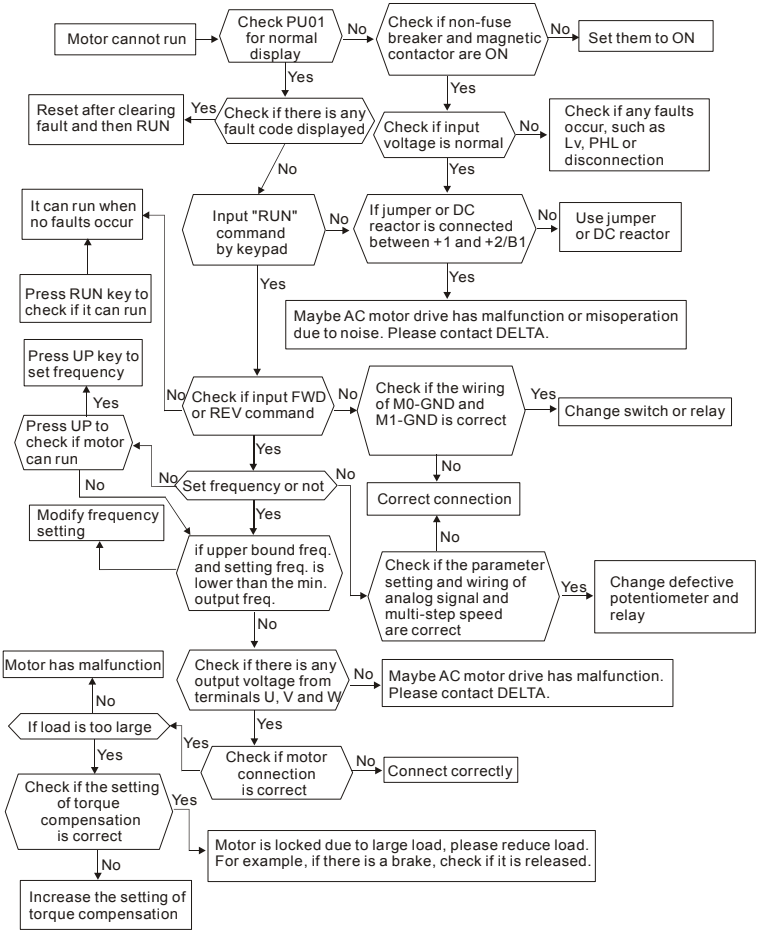

7.10 Motor Speed cannot be Changed

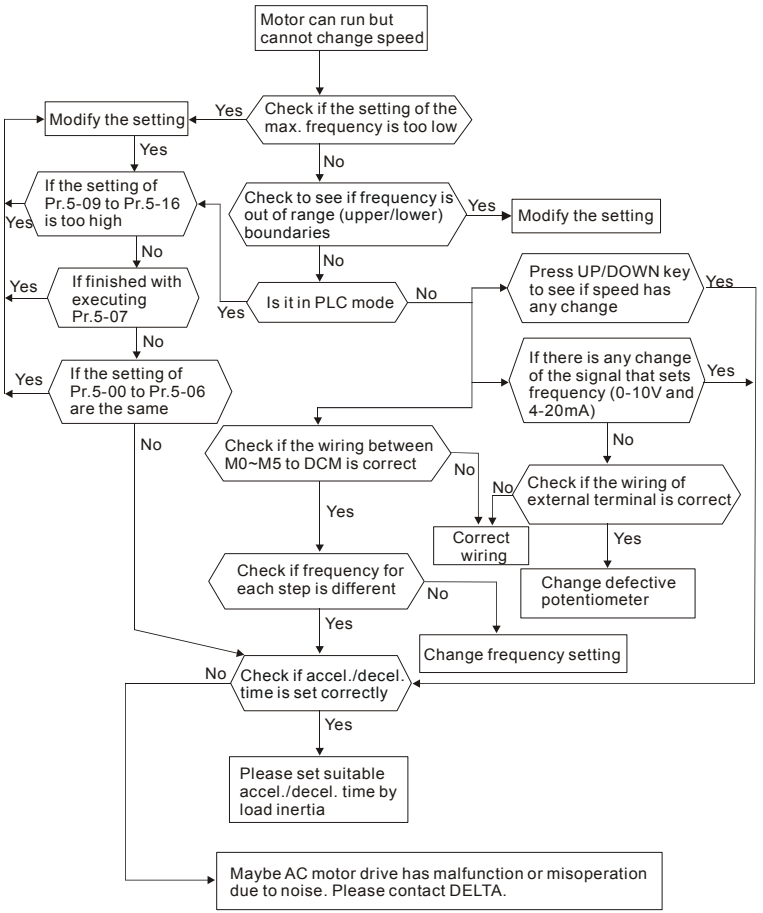

7.11 Motor Stalls during Acceleration

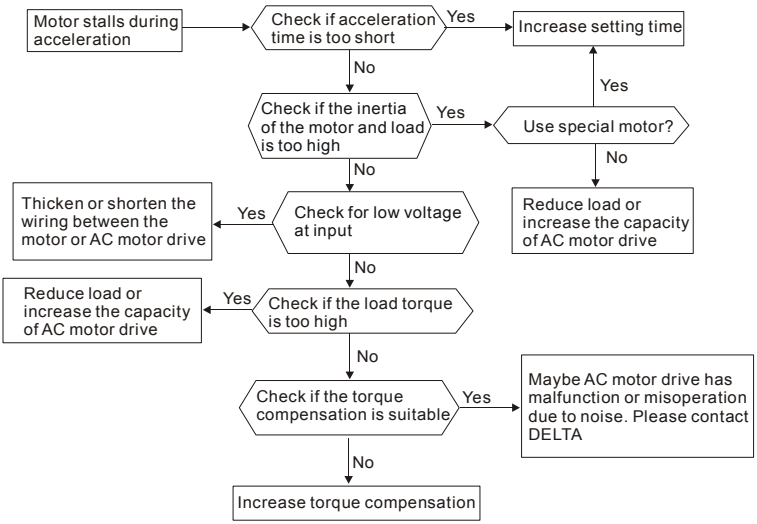

7.12 The Motor does not Run as Expected

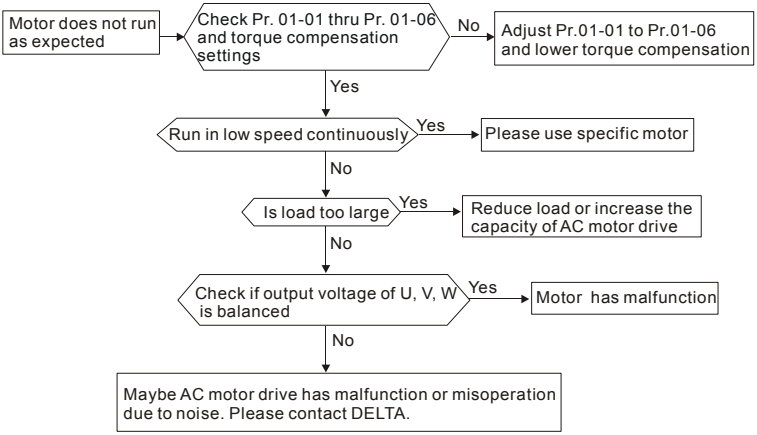

7.13 Electromagnetic/Induction Noise

Many sources of noise surround AC motor drives and penetrate it by radiation or conduction. It may cause malfunctioning of the control circuits and even damage the AC motor drive. Of course, there are solutions to increase the noise tolerance of an AC motor drive. But this has its limits. Therefore, solving it from the outside as follows will be the best.

1. Add surge suppressor on the relays and contacts to suppress switching surges.
2. Shorten the wiring length of the control circuit or serial communication and keep them separated from the power circuit wiring.
3. Comply with the wiring regulations by using shielded wires and isolation amplifiers for long wire length.
4. The grounding terminal should comply with the local regulations and be grounded independently, i.e. not to have common ground with electric welding machines and other power equipment.
5. Connect a noise filter at the mains input terminal of the AC motor drive to filter noise from the power circuit. VFD-S can have a built-in filter as option.

In short, solutions for electromagnetic noise exist of “no product”(disconnect disturbing equipment), “no spread”(limit emission for disturbing equipment) and “no receive”(enhance immunity).

7.14 Environmental Condition

Since the AC motor drive is an electronic device, you should comply with the environmental conditions as stated in the Chapter 2.1. The following step should also be.

1. To prevent vibration, the use of anti-vibration dampers is the last choice. Vibrations must be within the specification. Vibration causes mechanical stress and it should not occur frequently, continuously or repeatedly to prevent damaging to the AC motor drive.
2. Store the AC motor drive in a clean and dry location, free from corrosive fumes/dust to prevent corroded contacts. It also may cause short by low insulation in a humid location. The solution is to use both paint and dust-proof. For particular occasion, use the enclosure with whole-seal structure.
3. The ambient temperature should be within the specification. Too high or too low temperature will affect the lifetime and reliability. For semiconductor components, damage will occur once any specification is out of range. Therefore, it is necessary to periodically check air quality and the cooling fan and provide extra cooling of necessary. In addition, the microcomputer may not work in extremely low temperatures, making cabinet heating necessary.

4. Store within a relative humidity range of 0% to 90% and non-condensing environment. Use an air conditioner and/or exsiccator.

7.15 Affecting Other Machines

An AC motor drive may affect the operation of other machines due to many reasons. Some solutions are:

■ High Harmonics at Power Side

High harmonics at power side during running can be improved by:

1. Separate the power system: use a transformer for AC motor drive.
2. Use a reactor or rectifier at the power input terminal of the AC motor drive or decrease high harmonic by multiple circuit.
3. If phase lead capacitors are used (never on the AC motor drive output!!), use serial reactors to prevent capacitors damage from high harmonics.

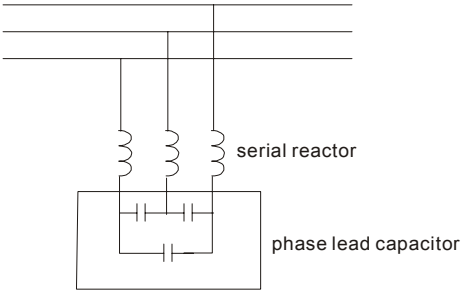

■ Motor Temperature Rises

When the motor is a standard induction motor with fan, the cooling will be bad at low speeds, causing the motor to overheat. Besides, high harmonics at the output increases copper and core losses. The following measures should be used depending on load and operation range.

1. Use a motor with independent ventilation (forced external cooling) or increase the motor rated power.
2. Use a special inverter duty motor.
3. Do NOT run in the low speed range.

Chapter 8 Maintenance and Inspections

Modern AC motor drives are based on solid-state electronics technology. Preventive maintenance is required to keep the AC motor drive in its optimal condition, and to ensure a long life. It is recommended to have a qualified technician perform a check-up of the AC motor drive regularly.

Daily Inspection:

Basic check-up items to detect if there were any abnormalities during operation are:

1. Whether the motors are operating as expected.
2. Whether the installation environment is abnormal.
3. Whether the cooling system is operating as expected.
4. Whether any irregular vibration or sound occurred during operation.
5. Whether the motors are overheating during operation.
6. Always check the input voltage of the AC drive with a Voltmeter.

Periodic Inspection:

Before the check-up, always turn off the AC input power and remove the cover. Wait at least 10 minutes after all display lamps have gone out, and then confirm that the capacitors have fully discharged by measuring the voltage between ⊕ ~ ⊖. It should be less than 25VDC.

DANGER!

1. Disconnect AC power before processing!
2. Only qualified personnel shall install, wire and maintain AC motor drives. Please take off any metal objects, such as watches and rings, before operation. And only insulated tools are allowed.
3. Never reassemble internal components or wiring.
4. Prevent electric shocks.

Periodical Maintenance

■ Ambient environment

Check Items	Methods and Criterion	Maintenance Period		
		Daily	Half Year	One Year
Check the ambient temperature, humidity, vibration and see if there is any dust, gas, oil or water drops	Visual inspection and measurement with equipment with standard specification	○		
Check for any dangerous objects near drive and motor	Visual inspection	○		

■ Voltage

Check Items	Methods and Criterion	Maintenance Period		
		Daily	Half Year	One Year
Check if the voltage of main circuit and control circuit is correct	Measure with multimeter with standard specification	○		

■ Keypad

Check Items	Methods and Criterion	Maintenance Period		
		Daily	Half Year	One Year
Is the display clear for reading?	Visual inspection	○		
Any missing characters?	Visual inspection	○		

■ Mechanical parts

Check Items	Methods and Criterion	Maintenance Period		
		Daily	Half Year	One Year
If there is any abnormal sound or vibration	Visual and aural inspection		○	
If there are any loose screws	Tighten the screws		○	

Check Items	Methods and Criterion	Maintenance Period		
		Daily	Half Year	One Year
Check partsfor deformity or damaged	Visual inspection		○	
If there is any color change caused by overheating	Visual inspection		○	
Check for dust and dirt	Visual inspection		○	

■ **Main circuit**

Check Items	Methods and Criterion	Maintenance Period		
		Daily	Half Year	One Year
If there are any loose or missing screws	Tighten or replace the screw		○	
If machine or insulator is deformed, cracked, damaged or with changed color change due to overheating or ageing	Visual inspection **NOTE: Please ignore the color change of copper plate**		○	
Check for dust and dirt	Visual inspection		○	

■ **Terminals and wiring of main circuit**

Check Items	Methods and Criterion	Maintenance Period		
		Daily	Half Year	One Year
If the wiring shows change of color change or deformation due to overheat	Visual inspection		○	
If the insulation of wiring is damaged or the color has changed	Visual inspection		○	
If there is any damage	Visual inspection		○	

■ **DC capacity of main circuit**

Check Items	Methods and Criterion	Maintenance Period		
		Daily	Half Year	One Year
If there is any leakage of liquid, change of color, cracks or deformation	Visual inspection	○		
Measure static capacity when required	Static capacity ≥ initial value X 0.85		○	

■ **Resistor of main circuit**

Check Items	Methods and Criterion	Maintenance Period		
		Daily	Half Year	One Year
If there is any peculiar smell or insulator cracks due to overheating	Visual inspection, smell		○	
If there is any disconnection	Visual inspection or measure with multimeter after removing wiring between +1/+2 ~ - Resistor value should be within ± 10%		○	

■ **Transformer and reactor of main circuit**

Check Items	Methods and Criterion	Maintenance Period		
		Daily	Half Year	One Year
If there is any abnormal vibration or peculiar smell	Visual, aural inspection and smell		○	

■ **Magnetic contactor and relay of main circuit**

Check Items	Methods and Criterion	Maintenance Period		
		Daily	Half Year	One Year
If there are any loose screws	Visual and aural inspection. Tighten screw if necessary.	○		
Check to see if contacts work correctly	Visual inspection	○		

■ **Printed circuit board and connector of main circuit**

Check Items	Methods and Criterion	Maintenance Period		
		Daily	Half Year	One Year
If there are any loose screws and connectors	Tighten the screws and press the connectors firmly in place.		○	
If there is any peculiar smell and color change	Visual inspection and smell		○	
If there is any crack, damage, deformation or corrosion	Visual inspection		○	
If there is any leaked liquid or deformation in capacitors	Visual inspection		○	

■ **Cooling fan of cooling system**

Check Items	Methods and Criterion	Maintenance Period		
		Daily	Half Year	One Year
If there is any abnormal sound or vibration	Visual, aural inspection and turn the fan with hand (turn off the power before operation) to see if it rotates smoothly			○
If there is any loose screw	Tighten the screw			○
If there is any change of color due to overheating	Change fan			○

■ **Ventilation channel of cooling system**

Check Items	Methods and Criterion	Maintenance Period		
		Daily	Half Year	One Year
If there is any obstruction in the heat sink, air intake or air outlet	Visual inspection	○		

This page intentionally left blank

Appendix A Specifications

Voltage Class		115V Class		
Model Number VFD-_ _ _S		002	004	007
Max. Applicable Motor Output (kW)		0.2	0.4	0.75
Max. Applicable Motor Output (HP)		0.25	0.5	1.0
Output Rating	Rated Output Capacity (KVA)	0.6	1.0	1.6
	Rated Output Current (A)	1.6	2.5	4.2
	Maximum Output Voltage (V)	3-phase Proportional to Twice the Input Voltage		
	Output Frequency (Hz)	1.0~400 Hz		
	Carrier Frequency (kHz)	3-10		
Input Rating	Rated Input Current (A)	Single phase		
		6	9	18
	Rated Voltage/Frequency	Single phase 100-120 V, 50/60Hz		
	Voltage Tolerance	+-10%(90-132V)		
	Freqency Tolerance	+-5%(47~63Hz)		
Cooling Method		Natural		
Weight (kg)		1.3	1.5	2.0

Voltage Class		230V Class				
Model Number VFD-_ _ _S		002	004	007	015	022
Max. Applicable Motor Output (kW)		0.2	0.4	0.75	1.5	2.2
Max. Applicable Motor Output (HP)		0.25	0.5	1.0	2.0	3.0
Output Rating	Rated Output Capacity (KVA)	0.6	1.0	1.6	2.9	4.4/4.2
	Rated Output Current (A)	1.6	2.5	4.2	7.5	11.0
	Maximum Output Voltage (V)	3-phase Proportional to Input Voltage				
	Output Frequency (Hz)	1.0~400 Hz				
	Carrier Frequency (kHz)	3-10				
Input Rating	Rated Input Current (A)	Single/3-phase				
		4.9/1.9	6.5/2.7	9.7/5.1	15.7/9.0	24/15
	Input Current for 1-phase model drive to be used as 3-phase model drive (A)	1.6	3.0	5.1	8.4	-
	Rated Voltage/Frequency	Single/3-phase 200-240 V, 50/60Hz				
	Voltage Tolerance	+-10%(180~264 V)				
	Freqency Tolerance	+-5%(4~63 Hz)				
Cooling Method		Natural			Fan Cooled	
Weight (kg)		1.3	1.5	1.5	2.2	2.5

Voltage Class		460V Class			
Model Number VFD-_ _ _S		004	007	015	022
Max. Applicable Motor Output (kW)		0.4	0.75	1.5	2.2
Max. Applicable Motor Output (HP)		0.5	1.0	2.0	3.0
Output Rating	Rated Output Capacity (KVA)	1.2	2.0	3.3	4.4
	Rated Output Current (A)	1.5	2.5	4.2	5.5
	Maximum Output Voltage (V)	3-phase Proportional to Input Voltage			
	Output Frequency (Hz)	1.0~400 Hz			
	Carrier Frequency (kHz)	3-10			
Input Rating	Rated Input Current (A)	3-phase			
		1.7	2.9	5.1	6.9
	Rated Voltage/Frequency	3-phase 380 to 480 V, 50/60Hz			
	Voltage Tolerance	+-10%(342~528 V)			
	Freqency Tolerance	+-5%(47~63 Hz)			
Cooling Method		Natural	Fan Cooled		
Weight (kg)		1.5	1.5	2.0	2.2

General Specifications			
Control Characteristics	Control System		SPWM (Sinusoidal Pulse Width Modulation, carrier frequency 3k-10kHz)
	Output Frequency Resolution		0.1Hz
	Torque Characteristics		Including the auto-torque, auto-slip compensation; starting torque can be 150% at 5Hz
	Overload Endurance		150% of rated current for 1 minute
	Accel/Decel Time		0.1to 600 second (2 Independent settings for Accel/Decel Time)
	V/f Pattern		V/f pattern adjustable
	Stall Prevention Level		20 to 150%, Setting of Rated Current
Operating Characteristics	Frequency Setting	Keypad	Setting by ▲ ▼ or Potentiometer
		External Signal	Potentiometer-5KΩ/0.5W, DC 0 to +10V or 0 to +5V (Input impedance 47KΩ), RS-485 interface, 4 to 20mA (Input impedance 250Ω); Multi-Function Inputs 1 to 5 (7 steps, Jog, up/down)
	Operation Setting Signal	Keypad	Setting by RUN, STOP
		External Signal	M0 to M5 can be combined to offer various modes of operation, RS-485 serial interface (MODBUS).
	Multi-Function Input Signal		Multi-step selection 0 to7, Jog, accel/decel inhibit, first/second accel/decel switch, counter, 8-step PLC operation, external Base Block (NC, NO), increase/decrease Master Frequency
	Multi-Function Output Indication		AC Drive Operating, Frequency Attained, Non-zero, Base Block, Fault Indication, Local/Remote indication, PLC Operation indication.
	Analog Output Signal		Analog frequency/current signal output.
Other Function			AVR, S-Curve, Over-Voltage/Over-Current Stall Prevention, Fault Records, Adjustable Carrier Frequency, DC Brake, Start Frequency for DC Brake, Momentary Power Loss restart, Frequency Limits, Parameter Lock/Reset, PID Feedback Control, Reverse Inhibition, etc.
Built-in EMI Filter			VFD002S21E, VFD004S21E, VFD004S43E, VFD007S21E, VFD015S21E, VFD022S21E
Protection			Self-testing, Over Voltage, Over Current, Under Voltage, Overload, Overheating, External Fault, Electronic thermal, Ground Fault.
Cooling			Forced air-cooling (**ONLY FOR** 022S2XA/B**;** XXXS43A/B/E 1HP~3HP**;** XXXSXXD**;** XXXS21E 400W~3HP). Others are Natural air-cooling.
Enviroment	Installation Location		Altitude 1,000 m or below, keep from corrosive gasses, liquid and dust
	Pollution Degree		2
	Ambient Temperature		-10°C to 40°C (Non-Condensing and not frozen)
	Storage Temperature		-20°C to 60°C
	Ambient Humidity		Below 90% RH (non-condensing)
	Vibration		9.80665m/s^2 (1G) less than 20Hz, 5.88m/s^2 (0.6G) at 20 to 50Hz

Appendix B Accessories

B.1 All Brake Resistors & Brake Units Used in AC Motor Drives

Note: Please only use DELTA resistors and recommended values. Other resistors and values will void Delta's warranty. Please contact your nearest Delta representative for use of special resistors. The brake unit should be at least 10 cm away from AC motor drive to avoid possible interference. Refer to the "Brake unit Module User Manual" for further details.

Voltage	Applicable Motor		Full Load Torque Nm	Resistor value spec for each AC Motor Drive	Brake Resistors Model and No. of Units Used		Brake Torque 10%ED	Min. Equivalent Resistor Value for each AC Motor Drive
	hp	kW						
115V/230V Series	1/4	0.2	0.110	80W 200Ω	BR080W200	1	400	120Ω
	1/2	0.4	0.216	80W 200Ω	BR080W200	1	220	120Ω
	1	0.75	0.427	80W 200Ω	BR080W200	1	125	80Ω
	2	1.5	0.849	300W 100Ω	BR300W100	1	125	55Ω
	3	2.2	1.262	300W 70Ω	BR300W70	1	125	35Ω
460V Series	1/2	0.4	0.216	80W 750Ω	BR080W750	1	230	470Ω
	1	0.75	0.427	80W 750Ω	BR080W750	1	125	260Ω
	2	1.5	0.849	300W 400Ω	BR300W400	1	125	190Ω
	3	2.2	1.262	300W 250Ω	BR300W250	1	125	145Ω

NOTE

1. Please select the brake unit and/or brake resistor according to the table. "-" means no Delta product. Please use the brake unit according to the Equivalent Resistor Value.
2. If damage to the drive or other equipment is due to the fact that the brake resistors and the brake modules in use are not provided by Delta, the warranty will be void.
3. Take into consideration the safety of the environment when installing the brake resistors.
4. If the minimum resistance value is to be utilized, consult local dealers for the calculation of the power in Watt.
5. Please select thermal relay trip contact to prevent resistor over load. Use the contact to switch power off to the AC motor drive!
6. When using more than 2 brake units, equivalent resistor value of parallel brake unit can't be less than the value in the column "Minimum Equivalent Resistor Value for Each AC Drive" (the right-most column in the table).

7. Please read the wiring information in the user manual of the brake unit thoroughly prior to installation and operation.
8. In applications with brake resistor or brake unit, Pr.6-00 (Over-voltage stall prevention) must be disabled. And Pr.8-15 (AVR function) shall not be used.
9. Definition for Brake Usage ED%

   Explanation: The definition of the barke usage ED(%) is for assurance of enough time for the brake unit and brake resistor to dissipate away heat generated by braking. When the brake resistor heats up, the resistance would increase with temperature, and brake torque would decrease accordingly. Suggest cycle time is one minute

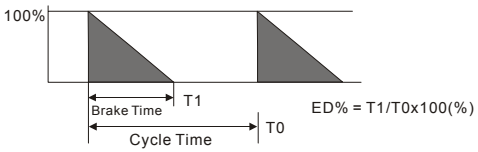

10. For safety reasons, install a thermal overload relay between brake unit and brake resistor. Together with the magnetic contactor (MC) in the mains supply circuit to the drive it offers protection in case of any malfunctioning. The purpose of installing the thermal overload relay is to protect the brake resistor against damage due to frequent braking or in case the brake unit is continuously on due to unusual high input voltage. Under these circumstances the thermal overload relay switches off the power to the drive. Never let the thermal overload relay switch off only the brake resistor as this will cause serious damage to the AC Motor Drive.

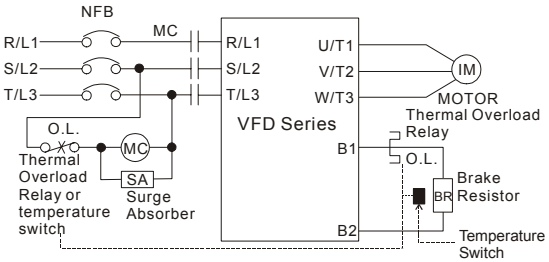

B.1.1 Dimensions and Weights for Brake resistors

(Dimensions are in millimeter)

Order P/N: BR080W200, BR080W750, BR300W70, BR300W100, BR300W250, BR300W400, BR400W150, BR400W040

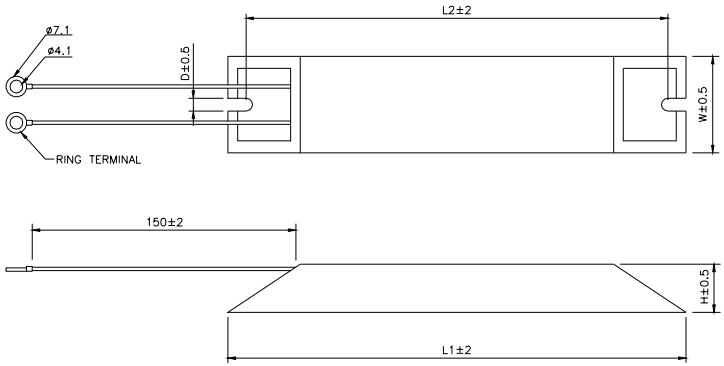

Model no.	L1	L2	H	D	W	Max. Weight (g)
BR080W200	140	125	20	5.3	60	160
BR080W750						
BR300W70	215	200	30	5.3	60	750
BR300W100						
BR300W250						
BR300W400						
BR400W150	265	250	30	5.3	60	930
BR400W040						

B.2 EMI Filters

The DELTA VFD-S Series 0.25-3HP, 115V, 230V, 460V AC drive uses DELTA EMI Filter. Use the table below to find the appropriate filter for your DELTA VFD-S drive.

Model of AC Motor Drive	EMI Filter
VFD002S21A/B, VFD004S21A/B, VFD007S21A/B	RF007S21AA
VFD015S21D/U, VFD022S21D/U	RF022S21BA
VFD004S43A/B, VFD007S43A/B	RF007S43AA
VFD002S11A/B, VFD004S11A/B	12DKT1W3S
VFD002S23A, VFD004S23A, VFD007S23A	08TDT1W4S
VFD007S11A/B	22DRT1W3S

Installation

All electrical equipment, including AC motor drives, will generate high-frequency/low-frequency noise and will interfere with peripheral equipment by radiation or conduction when in operation. By using an EMI filter with correct installation, much interference can be eliminated. It is recommended to use DELTA EMI filter to have the best interference elimination performance.

We assure that it can comply with following rules when AC motor drive and EMI filter are installed and wired according to user manual:

- **EN61000-6-4**
- **EN61800-3: 1996 + A11: 2000**
- **EN55011 (1991) Class A Group 1 (1st Environment, restricted distribution)**

General precaution

1. EMI filter and AC motor drive should be installed on the same metal plate.
2. Please install AC motor drive on footprint EMI filter or install EMI filter as close as possible to the AC motor drive.
3. Please wire as short as possible.
4. Metal plate should be grounded.
5. The cover of EMI filter and AC motor drive or grounding should be fixed on the metal plate and the contact area should be as large as possible.

Choose suitable motor cable and precautions

Improper installation and choice of motor cable will affect the performance of EMI filter. Be sure to observe the following precautions when selecting motor cable.

1. Use the cable with shielding (double shielding is the best).
2. The shielding on both ends of the motor cable should be grounded with the minimum length and maximum contact area.
3. Remove any paint on metal saddle for good ground contact with the plate and shielding.

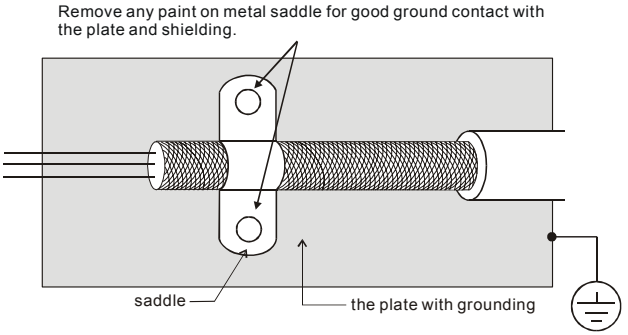

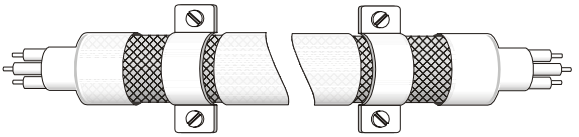

Saddle on both ends

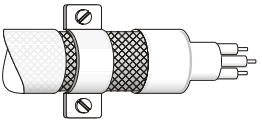

Saddle on one end

The length of motor cable

When motor is driven by an AC motor drive of PWM type, the motor terminals will experience surge voltages easily due to components conversion of AC motor drive and cable capacitance. When the motor cable is very long (especially for the 460V series), surge voltages may reduce insulation quality. To prevent this situation, please follow the rules below:

- Use a motor with enhanced insulation.
- Connect an output reactor (optional) to the output terminals of the AC motor drive
- The length of the cable between AC motor drive and motor should be as short as possible (10 to 20 m or less)
- For models 7.5hp/5.5kW and above:

Insulation level of motor	1000V	1300V	1600V
460VAC input voltage	66 ft (20m)	328 ft (100m)	1312 ft (400m)
230VAC input voltage	1312 ft (400m)	1312 ft (400m)	1312 ft (400m)

- For models 5hp/3.7kW and less:

Insulation level of motor	1000V	1300V	1600V
460VAC input voltage	66 ft (20m)	165 ft (50m)	165 ft (50m)
230VAC input voltage	328 ft (100m)	328 ft (100m)	328 ft (100m)

NOTE

When a thermal O/L relay protected by motor is used between AC motor drive and motor, it may malfunction (especially for 460V series), even if the length of motor cable is only 165 ft (50m) or less. To prevent it, please use AC reactor and/or lower the carrier frequency (Pr. 02-03 PWM carrier frequency).

NOTE

Never connect phase lead capacitors or surge absorbers to the output terminals of the AC motor drive.

- If the length is too long, the stray capacitance between cables will increase and may cause leakage current. It will activate the protection of over current, increase leakage current or not insure the correction of current display. The worst case is that AC motor drive may damage.
- If more than one motor is connected to the AC motor drive, the total wiring length is the sum of the wiring length from AC motor drive to each motor.

B.2.1 Dimensions

Dimensions are in millimeter and (inch)

Order P/N: RF007S21AA/ RF007S43AA

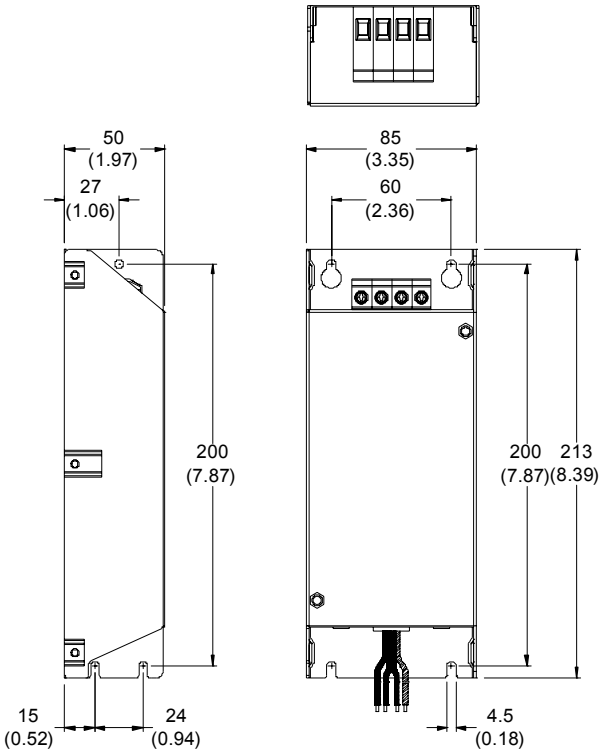

Order P/N: RF022S21BA

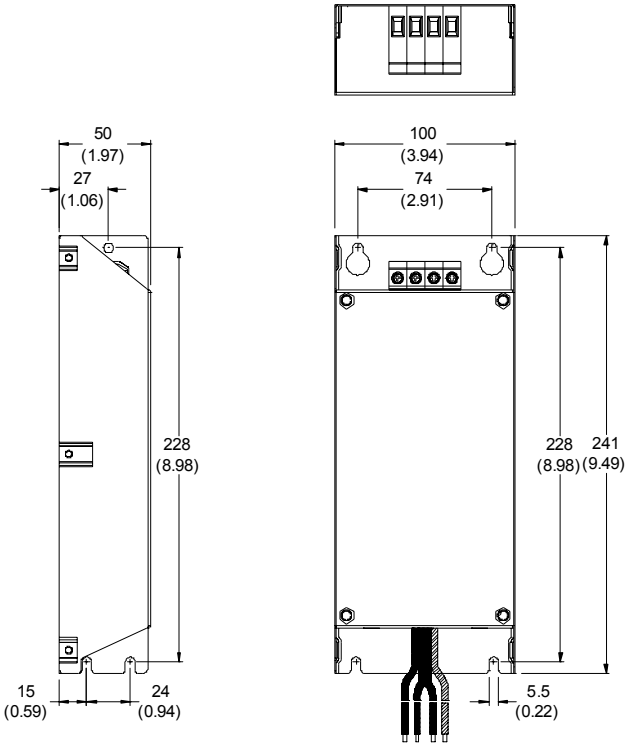

Order P/N: 12DKT1W3S

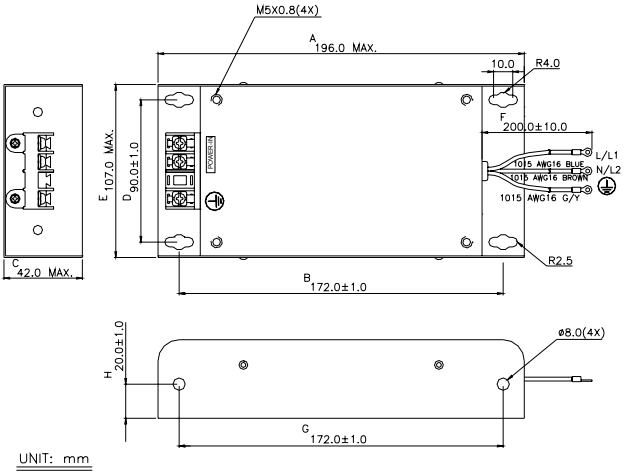

Order P/N: 08TDT1W4S

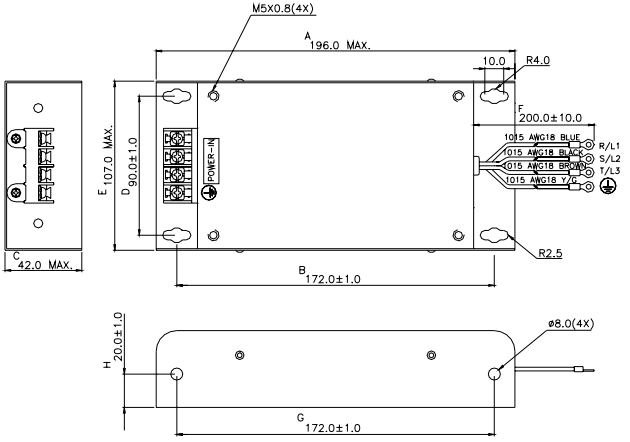

Order P/N: 22DRT1W3S

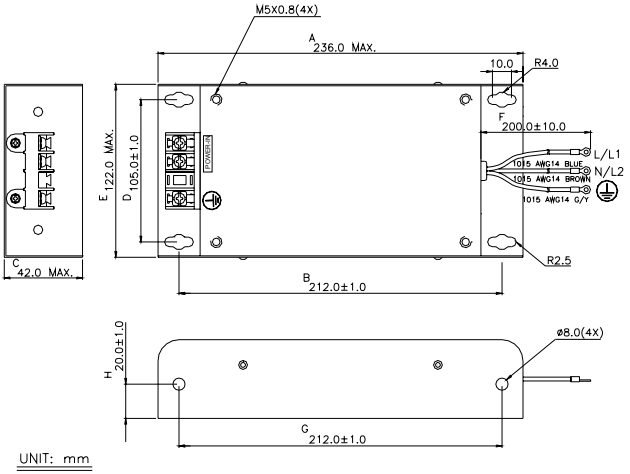

Order P/N: 35DRT1W3C

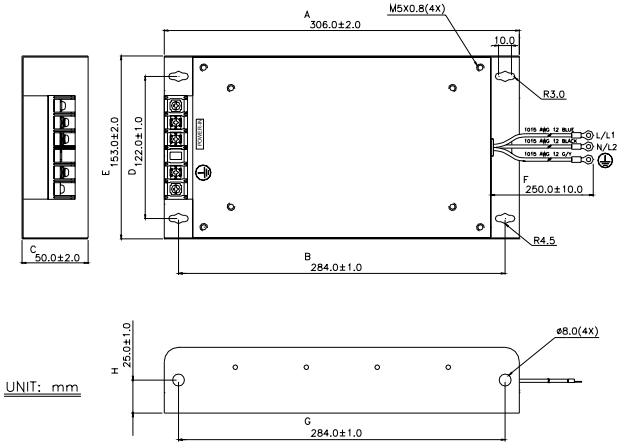

B.3 AC Reactor

B.3.1 AC Input Reactor Recommended Value

230V, 50/60Hz, 1-Phase

kW	HP	Fundamental Amps	Max. continuous Amps	Inductance (mH)
				3~5% impedance
0.2	1/4	4	6	6.5
0.4	1/2	5	7.5	3
0.75	1	8	12	1.5
1.5	2	12	18	1.25
2.2	3	18	27	0.8

460V, 50/60Hz, 3-Phase

kW	HP	Fundamental Amps	Max. continuous Amps	Inductance (mH)	
				3% impedance	5% impedance
0.4	1/2	2	3	20	32
0.75	1	4	6	9	12
1.5	2	4	6	6.5	9
2.2	3	8	12	5	7.5

B.3.2 AC Output Reactor Recommended Value

115V/230V, 50/60Hz, 3-Phase

kW	HP	Fundamental Amps	Max. continuous Amps	Inductance (mH)	
				3% impedance	5% impedance
0.2	1/4	4	4	9	12
0.4	1/2	6	6	6.5	9
0.75	1	8	12	3	5
1.5	2	8	12	1.5	3
2.2	3	12	18	1.25	2.5

460V, 50/60Hz, 3-Phase

kW	HP	Fundamental Amps	Max. continuous Amps	Inductance (mH)	
				3% impedance	5% impedance
0.4	1/2	2	3	20	32
0.75	1	4	6	9	12
1.5	2	4	6	6.5	9
2.2	3	8	12	5	7.5

B.3.3 Applications for AC Reactor

Connected in input circuit

Application 1	Question
When more than one AC motor drive is connected to the same mains power, and one of them is ON during operation.	When applying power to one of the AC motor drive, the charge current of the capacitors may cause voltage dip. The AC motor drive may be damaged when over current occurs during operation.

Correct wiring

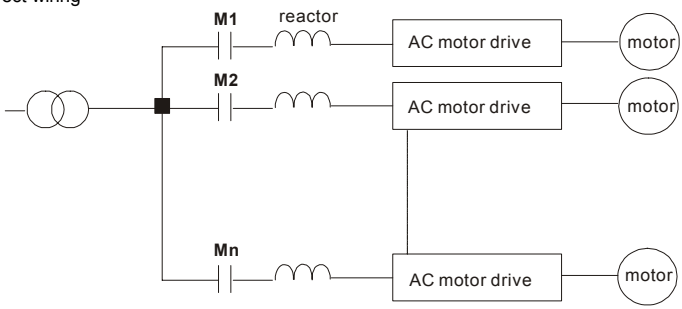

Application 2	Question
Silicon rectifier and AC motor drive are connected to the same power.	Switching spikes will be generated when the silicon rectifier switches on/off. These spikes may damage the mains circuit.

Correct wiring

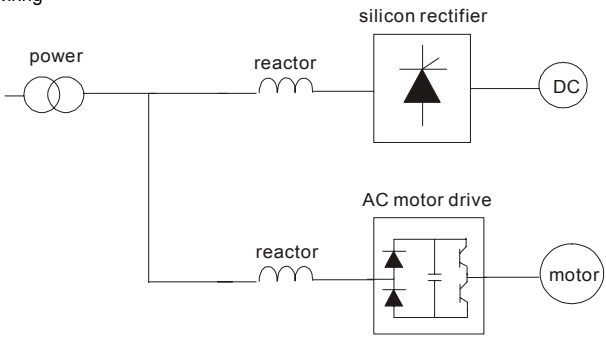

Application 3	Question
Used to improve the input power factor, to reduce harmonics and provide protection from AC line disturbances (surges, switching spikes, short interruptions, etc.). The AC line reactor should be installed when the power supply capacity is 500kVA or more and exceeds 6 times the inverter capacity, or the mains wiring distance ≤10m.	When the mains power capacity is too large, line impedance will be small and the charge current will be too high. This may damage AC motor drive due to higher rectifier temperature.

Correct wiring

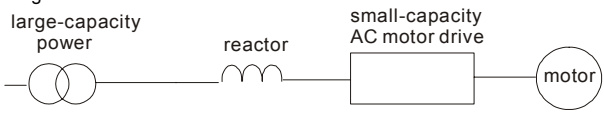

B.4 DC Choke Recommended Values

230V DC Choke

Input voltage	kW	HP	DC Amps	Inductance (mh)	MTE CAT. NO
230Vac 50/60Hz 3-Phase	0.2	1/4	2	20.00	2RB003
	0.4	1/2	4	15.00	4RB003
	0.75	1	9	7.50	9RB003
	1.5	2	12	4.00	12RB003
	2.2	3	18	2.75	18RB003
230Vac 50/60Hz 1-Phase	0.2	1/4	4	50.00	--
	0.4	1/2	9	25.00	--
	0.75	1	9	12.00	--
	1.5	2	12	8.00	--
	2.2	3	18	6.00	--

460V DC Choke

Input voltage	kW	HP	DC Amps	Inductance (mh)	MTE CAT. NO
460Vac 50/60Hz 3-Phase	0.4	1/2	2	50.00	2RB004
	0.75	1	4	25.00	4RB004
	1.5	2	9	11.50	9RB004
	2.2	3	9	11.50	9RB004

B.5 Zero Phase Reactor (RF220X00A)

Dimensions are in millimeter and (inch)

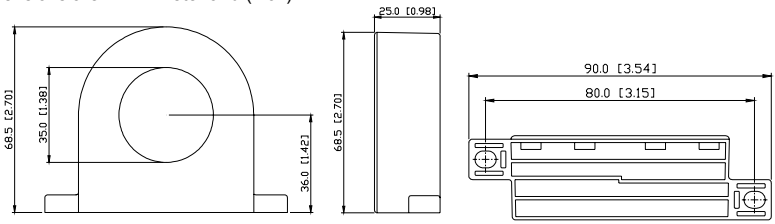

	Motor		Qty.	Recommended Wire Size (mm^2)
	HP	kW		
115V/230V Series	1/4	0.2	1	0.5 - 5.5
	1/2	0.4		
	1	0.75		
	2	1.5		
	3	2.2		3.5 - 5.5
460V Series	1/4	0.2	1	0.5 - 5.5
	1/2	0.4		
	1	0.75		
	2	1.5		
	3	2.2		

Wiring Method

Please wind each wire 4 times around the core. The reactor must be put at inverter output as close as possible.

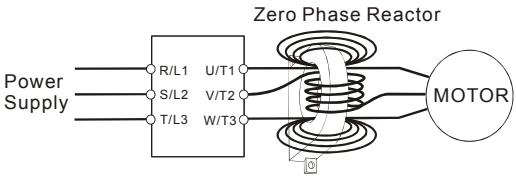

B.6 Din Rail-DR01

(Dimensions are in millimeter)

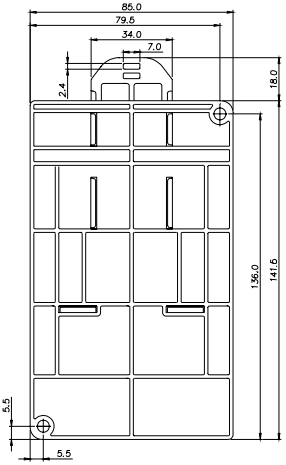

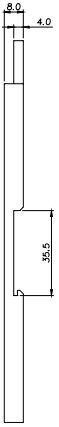

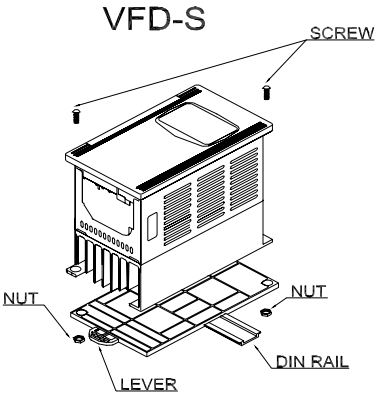

Models	Screw Size
VFD002S11A/B	M4*22
VFD002S21A/B/E	M4*22
VFD002S23A/B	M4*22
VFD004S11A/B	M4*12
VFD004S21A/B/E	M4*12
VFD004S23A/B	M4*12
VFD004S43A/B/E	M4*12
VFD007S21A/B/E	M4*12
VFD007S23A/B	M4*12
VFD007S43A/B/E	M4*12
VFD015S23D	M4*12

- To install the Din Rail Adapter use the specified screws for different models. Refer to the above chart.
- To mount the drive on a Din Rail, place the drive on the rail and push the lever toward the rail.

B.7 Remote Controller RC-01

(Dimensions are in millimeter)

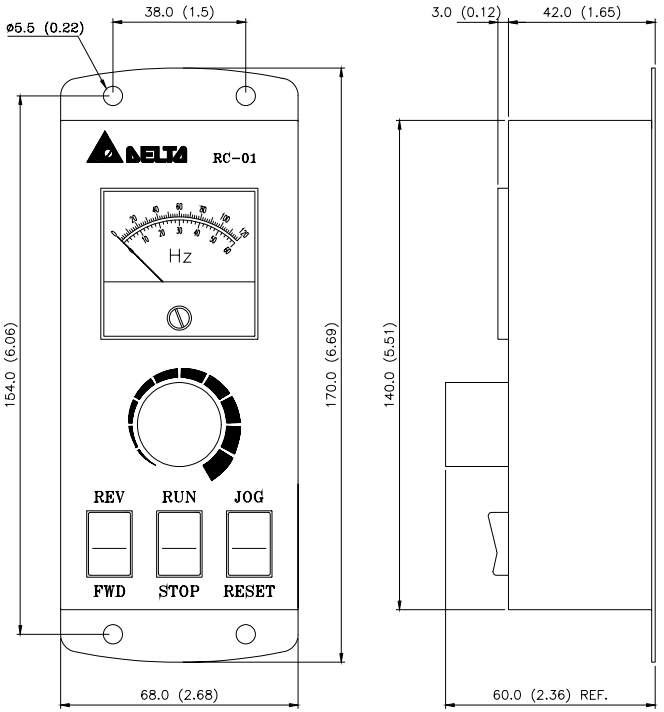

8	6	5	4	16	15	14	13	11

← RC-01 Terminal block

(Wiring connections)

AFM	GND	AVI	+10V	GND	M2	M0	M1	M3

← VFD-S I/O Block

VFD-S Programming

Pr. 2-00 set to d01

Pr. 2-01 set to d01

Pr. 4-04 set to d02 (M0, M1 set at RUN/STOP and FWD/REV)

Pr. 4-05 set to d06 (M2 set for reset)

Pr. 4-06 set to d10 (M3 set for jog operation)

B.8 Conduit Bracket (BK-S)

(Dimensions are in millimeter)

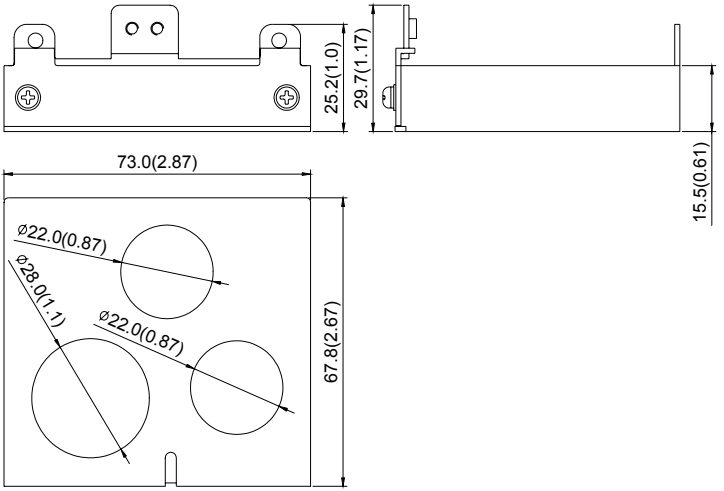

B.9 Non-fuse Circuit Breaker Chart

The fuse should comply with UL248 and the breaker should comply with UL489.

The current rating of the breaker shall be within 2~4 times maximum input current rating.

(Refer to Appendix A for rated input/output current)

1-phase		3-phase	
Model	Recommended non-fuse breaker (A)	Model	Recommended non-fuse breaker (A)
VFD002S11A/B	15	VFD002S23A	5
VFD002S21A/B/E	10	VFD004S23A	5
VFD004S11A/B	20	VFD004S43A/B/E	5
VFD004S21A/B/E	15	VFD007S23A	10
VFD007S11A/B	30	VFD007S43A/B/E	5
VFD007S21A/B/E	20	VFD015S23D	20
VFD015S21D/E	30	VFD015S43D/E/U	10
VFD022S21D/E/U	50	VFD022S23D	30
		VFD022S43D/E/U	15

Fuse Specification Chart

Smaller fuses than those shown in the table are permitted.

Model	I (input)(A)	I (output)(A)	Line Fuse	
			I (A)	Bussmann P/N
VFD002S11A/B	6	1.6	15	JJN-15
VFD002S21A/B/E	4,9	1.6	10	JJN-10
VFD002S23A	2.4	1.6	5	JJN-6
VFD004S11A/B	9	2.5	20	JJN-20
VFD004S21A/B/E	6.5	2.5	15	JJN-15
VFD004S23A	3.0	2.5	5	JJN-6
VFD004S43A/B/E	1.9	1.5	5	JJN-5
VFD007S11A/B	18	4.2	30	JJN-30
VFD007S21A/B/E	9.7	4.2	20	JJN-20
VFD007S23A	5.1	4.2	10	JJN-10
VFD007S43A/B/E	3.2	2.5	5	JJN-5
VFD015S21D/E	15.7	7.5	30	JJN-30
VFD015S23D	9.0	7.5	20	JJN-20
VFD015S43D/E/U	4.3	4.2	10	JJN-10
VFD022S21D/E/U	24	11.0	50	JJN-50
VFD022S23D	15	11.0	30	JJN-30
VFD022S43D/E/U	7.1	5.5	15	JJN-15

This page intentionally left blank

Appendix C How to Select the Right AC Motor Drive

The choice of the right AC motor drive for the application is very important and has great influence on its lifetime and the performance. If the capacity of AC motor drive is too large, it cannot offer complete protection to the motor and it may be damaged. If the capacity of AC motor drive is too small, it cannot offer the required performance and the AC motor drive may be damaged due to overloading.

But by simply selecting the AC motor drive of the same capacity as the motor, user application requirements cannot always be fully met. Therefore, a designer should consider all the conditions, including load type, load speed, load characteristic, operation method, rated output, rated speed, power and the change of load capacity. The following table lists the factors you need to consider, depending on your requirements.

Item		Related Specification			
		Speed and torque characteristics	Time ratings	Overload capacity	Starting torque
Load type	Friction load and weight load Liquid (viscous) load Inertia load Load with power transmission	●			●
Load speed and torque characteristics	Constant torque Constant output Decreasing torque Decreasing output	●	●		
Load characteristics	Constant load Shock load Repetitive load High starting torque Low starting torque	●	●	●	●
Continuous operation, Short-time operation Long-time operation at medium/low speeds			●	●	
Maximum output current (instantaneous) Constant output current (continuous)		●		●	
Maximum frequency, Base frequency		●			
Power supply transformer capacity or percentage impedance Voltage fluctuations and unbalance Number of phases, single phase protection Frequency				●	●
Mechanical friction, losses in wiring				●	●
Duty cycle modification			●		

C.1 Capacity Formulas

1. When one AC motor drive operates one motor

The starting capacity should be less than 1.5x rated capacity of AC motor drive

The starting capacity is

$$\frac{k \times N}{973 \times \eta \times \cos\varphi}\left(T_L + \frac{GD^2}{375} \times \frac{N}{t_A}\right) \leq 1.5 \times the_capacity_of_AC_motor_drive(kVA)$$

2. When one AC motor drive operates more than one motor

2.1 The starting capacity should be less than the rated capacity of the AC motor drive

- *Acceleration time ≦60 seconds*

The starting capacity is

$$\frac{k \times N}{\eta \times \cos\varphi}\left[n_T + n_S(k_S - 1)\right] = P_{C1}\left[1 + \frac{n_s}{n_T}(k_S - 1)\right] \leq 1.5 \times the_capacity_of_AC_motor_drive(kVA)$$

- *Acceleration time ≧60 seconds*

The starting capacity is

$$\frac{k \times N}{\eta \times \cos\varphi}\left[n_T + n_S(k_S - 1)\right] = P_{C1}\left[1 + \frac{n_s}{n_T}(k_S - 1)\right] \leq the_capacity_of_AC_motor_drive(kVA)$$

2.2 The current should be less than the rated current of the AC motor drive(A)

- *Acceleration time ≦60 seconds*

$$n_T + I_M\left[1 + \frac{n_S}{n_T}(k_S - 1)\right] \leq 1.5 \times the_rated_current_of_AC_motor_drive(A)$$

- *Acceleration time ≧60 seconds*

$$n_T + I_M\left[1 + \frac{n_S}{n_T}(k_S - 1)\right] \leq the_rated_current_of_AC_motor_drive(A)$$

2.3 When it is running continuously

- The *requirement* of load capacity should be less than the capacity of the AC motor drive(kVA)

  The requirement of load capacity is

$$\frac{k \times P_M}{\eta \times \cos\varphi} \le the_capacity_of_AC_motor_drive(kVA)$$

- *The motor capacity should be less than the capacity of AC motor drive*

$$k \times \sqrt{3} \times V_M \times I_M \times 10^{-3} \le the_capacity_of_AC_motor_drive(kVA)$$

- *The current should be less than the rated current of AC motor drive(A)*

$$k \times I_M \le the_rated_current_of_AC_motor_drive(A)$$

Symbol explanation

P_M	: Motor shaft output for load (kW)
η	: Motor efficiency (normally, approx. 0.85)
$\cos\varphi$	: Motor power factor (normally, approx. 0.75)
V_M	: Motor rated voltage (V)
I_M	: Motor rated current (A), for commercial power
k	: Correction factor calculated from current distortion factor (1.05-1.1, depending on PWM method)
P_{C1}	: Continuous motor capacity (kVA)
k_S	: Starting current/rated current of motor
n_T	: Number of motors in parallel
n_S	: Number of simultaneously started motors
GD^2	: Total inertia (GD^2) calculated back to motor shaft (kg m^2)
T_L	: Load torque
t_A	: Motor acceleration time
N	: Motor speed

C.2 General Precautions

Selection Note

A. When the AC Motor Drive is connected directly to a large-capacity power transformer (600kVA or above) or when phase lead capacitors are switched, excess peak currents may occur in the power input circuit and the rectifier section might be damaged. To avoid this, use an AC input reactor (optional) before AC Motor Drive mains input to reduce the current and improve the input power efficiency.

B. When a special motor is used or more than one motor is driven in parallel with a single AC Motor Drive, select the AC Motor Drive current ≥1.25x(Sum of the motor rated currents).

C. The starting and accel./decel. characteristics of a motor are limited by the rated current and the overload protection of the AC Motor Drive. Compared to running the motor D.O.L. (Direct On-Line), a lower starting torque output with AC Motor Drive can be expected. If higher starting torque is required (such as for elevators, mixers, tooling machines, etc.) use an AC Motor Drive of higher capacity or increase the capacities for both the motor and the AC Motor Drive.

D. When an error occurs on the drive, a protective circuit will be activated and the AC Motor Drive output is turned off and the motor will coast to stop. For an emergency stop, an external mechanical brake is needed to quickly stop the motor.

Parameter Settings Note

A. The AC Motor Drive can be driven at an output frequency up to 400Hz (less for some models). Setting errors may create a dangerous situation. For safety, the use of the upper limit frequency function is strongly recommended.

B. High DC brake operating voltages and long operation time (at low frequencies) may cause overheating of the motor. In that case, forced external motor cooling is recommended.

C. Motor accel./decel. time is determined by motor rated torque, load torque, and load inertia.

D. If the stall prevention function is activated, the accel./decel. time is automatically extended to a length that the AC Motor Drive can handle. If the motor needs to decelerate within a certain time with high load inertia that can't be handled by the AC Motor Drive in the required time, either use an external brake resistor and/or brake unit, depending on the model, (to shorten deceleration time only) or increase the capacity for both the motor and the AC Motor Drive.

C.3 How to Choose a Suitable Motor

Standard motor

When using the AC Motor Drive to control a standard 3-phase induction motor, take the following precautions:

A. The motor losses are greater than for an inverter duty motor.

B. Avoid running the motor at low speed for a long time. Under this condition, the motor temperature may rise above the motor rating due to limited airflow produced by the motor's fan. Consider external forced motor cooling.

C. When the standard motor operates at low speed for long time, the output load must be decreased.

D. The load tolerance of a standard motor is as follows:

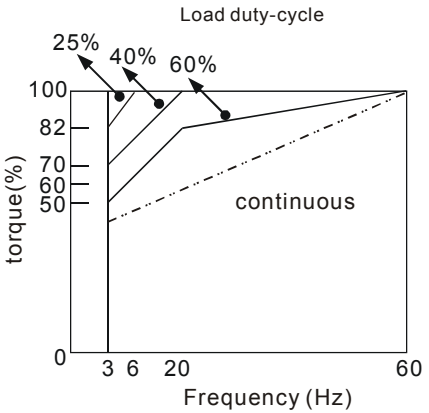

E. If 100% continuous torque is required at low speed, it may be necessary to use a special inverter duty motor.

F. Motor dynamic balance and rotor endurance should be considered if the operating speed exceeds the rated speed (60Hz) of a standard motor.

G. Motor torque characteristics vary when an AC Motor Drive instead of commercial power supply drives the motor. Check the load torque characteristics of the machine to be connected.

H. Because of the high carrier frequency PWM control of the VFD series, pay attention to the following motor vibration problems:

- *Resonant mechanical vibration: anti-vibration (damping) rubbers should be used to mount equipment that runs at varying speed.*
- *Motor imbalance: special care is required for operation at 50 or 60 Hz and higher frequency.*
- *To avoid resonances, use the Skip frequencies.*

I. The motor fan will be very noisy when the motor speed exceeds 50 or 60Hz.

Special motors:

A. Pole-changing (Dahlander) motor:

The rated current is different from that of a standard motor. Please check before operation and select the capacity of the AC motor drive carefully. When changing the pole number the motor needs to be stopped first. If over current occurs during operation or regenerative voltage is too high, please let the motor free run to stop (coast).

B. Submersible motor:

The rated current is higher than that of a standard motor. Please check before operation and choose the capacity of the AC motor drive carefully. With long motor cable between AC motor drive and motor, available motor torque is reduced.

C. Explosion-proof (Ex) motor:

Needs to be installed in a safe place and the wiring should comply with the (Ex) requirements. Delta AC Motor Drives are not suitable for (Ex) areas with special precautions.

D. Gear reduction motor:

The lubricating method of reduction gearbox and speed range for continuous operation will be different and depending on brand. The lubricating function for operating long time at low speed and for high-speed operation needs to be considered carefully.

E. Synchronous motor:

The rated current and starting current are higher than for standard motors. Please check before operation and choose the capacity of the AC motor drive carefully. When the AC motor drive operates more than one motor, please pay attention to starting and changing the motor.

Power Transmission Mechanism

Pay attention to reduced lubrication when operating gear reduction motors, gearboxes, belts and chains, etc. over longer periods at low speeds. At high speeds of 50/60Hz and above, lifetime reducing noises and vibrations may occur.

Motor torque

The torque characteristics of a motor operated by an AC motor drive and commercial mains power are different.

Below you'll find the torque-speed characteristics of a standard motor (4-pole, 15kW):

| *VFD-S Series*

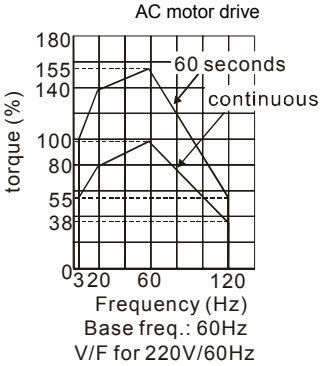
AC motor drive
180
155
140
100
80
55
38
0
torque (%)
60 seconds
continuous
3 20
60
120
Frequency (Hz)
Base freq.: 60Hz
V/F for 220V/60Hz

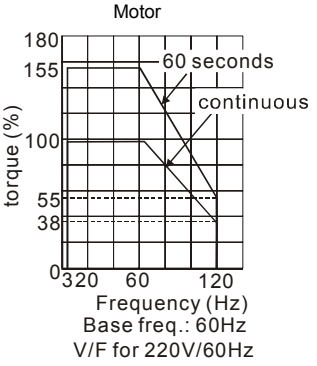
Motor
180
155
100
55
38
0
torque (%)
60 seconds
continuous
3 20
60
120
Frequency (Hz)
Base freq.: 60Hz
V/F for 220V/60Hz

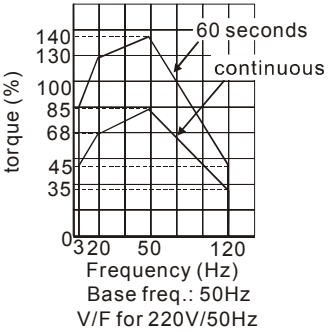
140
130
100
85
68
45
35
0
torque (%)
60 seconds
continuous
3 20
50
120
Frequency (Hz)
Base freq.: 50Hz
V/F for 220V/50Hz

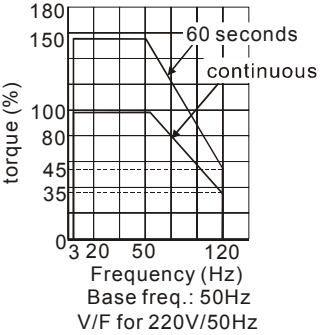
180
150
100
80
45
35
0
torque (%)
60 seconds
continuous
3 20
50
120
Frequency (Hz)
Base freq.: 50Hz
V/F for 220V/50Hz